Guidelines for Electronic Circulation of Planning & Development Applications

This document is intended to provide guidelines on the proper use of electronic materials that are circulated as part of the application review process.

- The information included in the circulation package may be subject to copyright and must only be used for the review of the submitted application.

- Application materials are provided to you for the specific and sole purpose of allowing (i) members of the Community Association Planning Committee and/or Board of Directors and (ii) members of the public who would be directly affected by the application's approval (collectively, the "Identified Recipients") to review and comment on the application for a development permit for a proposed project in your area of business/residence. Please note that use of these materials for any other purpose or making further reproduction or distribution beyond the Identified Recipients is strictly prohibited and may constitute an offense under the Copyright Act (Canada). Accordingly, any distribution of the materials to the Identified Recipients must be accompanied with the following instructions in writing:

  "Application materials are provided to you for the specific and sole purpose of allowing you to review and comment on the application for a development permit for a proposed project in your area of business/residence. Please note that use of these materials for any other purpose or making further reproduction or distribution of them is strictly prohibited and may constitute an offense under the Copyright Act (Canada)."

  The City will not be responsible or liable for any claim that may arise as a result of any misuse or unauthorized reproduction or distribution of the application materials by you or any Identified Recipients.

- Citizens who wish to view the plans can do so at the Municipal Building (800 Macleod Trail S.E.) by contacting either the File Manager or the Circulation Department at 403.268.5744 or dp.circ@calgary.ca

- The information provided must not be made available on the internet.

Should anyone wish to obtain additional information regarding the application, please contact the File Manager directly.

February 24, 2021

A new Development Permit application has been submitted at the below noted address(es), and we are sending this information for comments.

If you have questions or concerns related to this application, please contact the file manager directly at any point in the review process.

Application Details

File Number: DP2021-1041

File Manager: DINO KASPARIS **Phone:** (403) 268-2968 **eMail:** Dino.Kasparis@calgary.ca

Address: 534 23 AV NW **Legal:** 2934O;40;16,17

Address: See application for all addresses. **Legal:**

Land Use Bylaw: 1P2007 **L.U.D.:** M-C2

Community: MOUNT PLEASANT **Ward:** 07

Application Description: New: Multi-Residential Development (1 building)

Thank you for taking the time to respond. Your input is greatly appreciated

Please note that any written submissions made in response to the application will form part of the official record, and upon final decision of the application the correspondence will be available for public viewing.

Please return your response to:

Circulation Control
Planning and Development
P.O. Box 2100 Station M
IMC 8201
eMail: dp.circ@calgary.ca

This information is released and may only be used for the sole purpose of your organizations meeting to discuss the recommendations or comments to be made to the City of Calgary on this permit.

Please check the corresponding box below and forward any comments to the above sender.

☐ No Objection ☐ Comments Attached

Name: _____ **Date:** _____

Organization: _____ **Comments Are Due By:** **March 16, 2021**

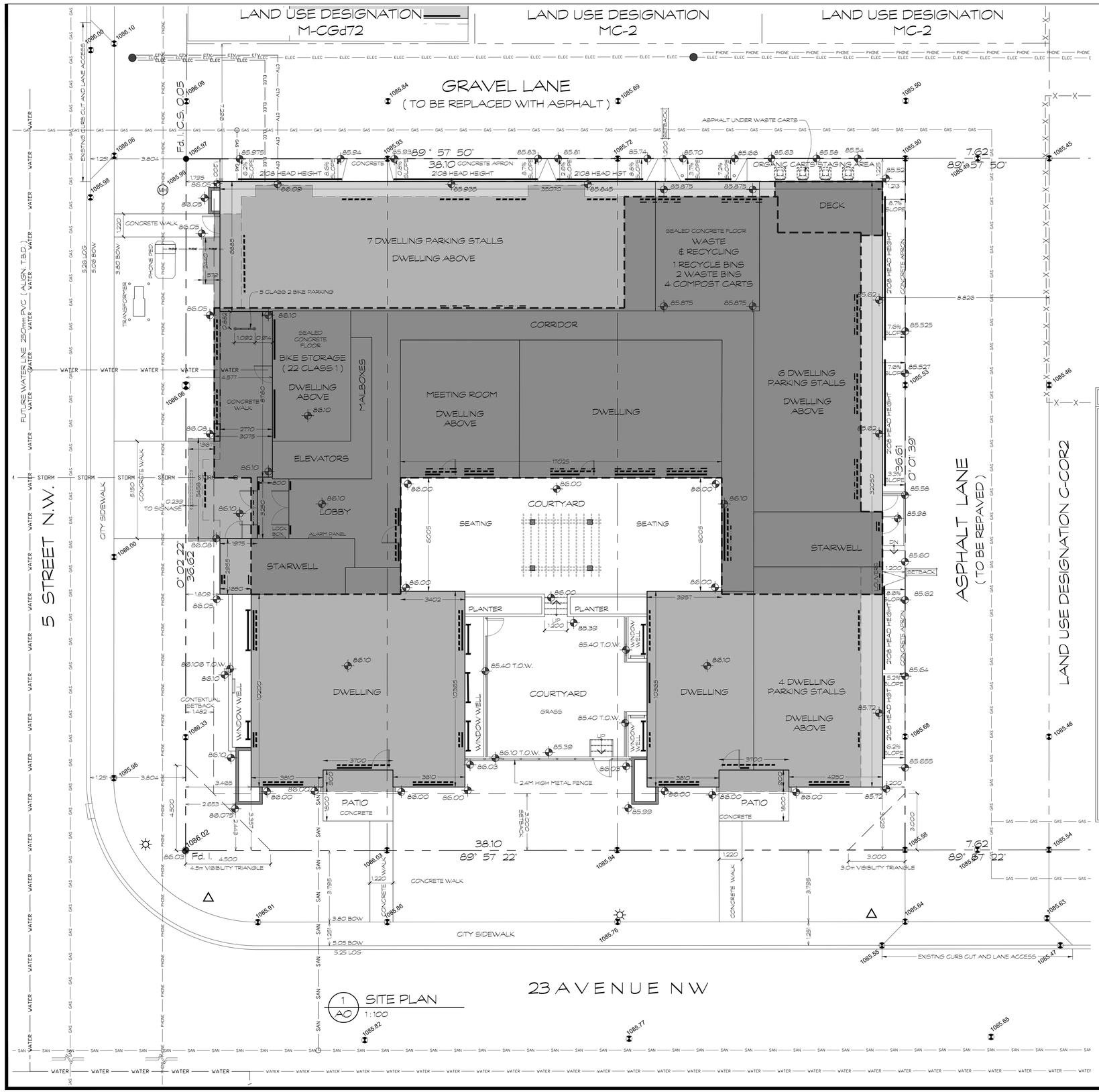

1 AO SITE PLAN
1 : 100

UTILITIES SCHEDULE		
GAS	GAS / GAS	EXISTING UNDERGROUND.
	GAS / GAS	EXISTING TO BE REMOVED
	GAS / GAS	NEW LOCATION.
ELEC	ELEC / ELEC	EXISTING UNDERGROUND.
	ELEC / ELEC	EXISTING TO BE REMOVED
	ELEC / ELEC	NEW LOCATION.
WATER	WATER / WATER	EXISTING UNDERGROUND.
	WATER / WATER	EXISTING TO BE REMOVED
	WATER / WATER	NEW 19mm WATER LINE.
SANITARY	SAN / SAN	EXISTING UNDERGROUND.
	SAN / SAN	EXISTING TO BE REMOVED
	SAN / SAN	NEW 150mm SANITATY LINE.
STORM	STORM / STORM	EXISTING UNDERGROUND.
	STORM / STORM	EXISTING TO BE REMOVED
	STORM / STORM	NEW STORM LINE.
CTV	CTV / CTV	EXISTING UNDERGROUND.
	CTV / CTV	EXISTING TO BE REMOVED
	CTV / CTV	NEW LOCATION.
PHONE	PHONE / PHONE	EXISTING UNDERGROUND.
	PHONE / PHONE	EXISTING TO BE REMOVED
		NEW LOCATION.

LEGEND	
0.00	PROPOSED GRADES
1085.55	EXISTING GRADES
	FOUND IRON POST
MH	MANHOLE
	UTILITY POLE
	LIGHT STANDARD
	SIGN

SITE INFORMATION

CIVIC ADDRESS : 2400 5th AVENUE NW
CALGARY, AB

LEGAL DESCRIPTION : LOTS 15 to 20
BLOCK 40
PLAN 29340

COMMUNITY : MOUNT PLEASANT

LAND USE : M-C2

BYLAW SETBACKS : SHARED WITH STREET = CONTEXTUAL LESS 1.5M OR 3.0 METERS
ADJACENT SETBACKS = 1.48m
SHARED WITH LANE = 1.2 METERS

LOT INFORMATION : TAKEN FROM - ARC SURVEYS LTD. 403-277-1272
DATED : 10 OCT. 2018 FILE No. : 182623

LOT COVERAGE : AREA OF LOT _____ 1394.04m²
FOOTPRINT OF BUIDLING _____ 874.96m²
GROSS FLOOR AREA _____ 3485.82m²
FLOOR AREA RATIO _____ 2.50

AREA DENSITY : THERE IS NO MAXIMUM AREA DENSITY FOR PARCELS IN M-C2 DISTRICTS.

WASTE INFO : 30 DWELLING UNITS EXPECTED TO PRODUCE 6.9m³ OF WASTE MATERIAL PER WEEK.
AUTOMATED CARTS = 0.24m³ x 4 = 0.96m³
4 YARD BIN = 3.06m³ x 2 = 6.12m³
6 YARD BIN = 4.58m³
TOTAL = 11.66m³

FLOOR AREA : MAIN FLOOR = 513.47m²
2nd FLOOR = 833.39m²
3rd FLOOR = 833.39m²
4th FLOOR = 833.39m²
5th FLOOR = 472.18m²
TOTAL = 3485.82m²

VEHICLE PARKING : PARKING STALLS REQUIRED :
AREA 3 = 0.9 x 30 DWELLING UNITS = 27 STALLS
VISITOR PARKING STALLS REQUIRED = 5 STALLS
PARKING PROVIDED = 17 STALLS

BIKE PARKING : CLASS 1 = 0.5 x 30 DWLGS = 15 (32 PROVIDED INDOORS)
CLASS 2 = 0.1 x 30 DWLGS = 3 (5 PROVIDED OUTDOORS)

WINDOW & DOOR LOCATIONS
5th FLOOR OPENINGS
2nd - 4th FLOOR OPENINGS
GROUND FLOOR OPENINGS
BASEMENT OPENINGS

FLOOR AREAS
DENOTES ONE STOREY
DENOTES 4 STOREYS
DENOTES 5 STOREYS

baboushkin design group
tel : (403) 283-4319 fax : (403) 283-3603
1310A gladstone road nw calgary alberta t2n 3g3

no.	revisions	date
.	.	.
	issued for development permit	21/02/17
	issued for building permit	.

consultants

notes :
1. THIS DRAWING MUST NOT BE SCALED
2. CONTRACTORS SHALL VERIFY ALL DIMENSIONS PRIOR TO COMMENCING WORK. ANY ERRORS OR OMISSIONS MUST BE REPORTED TO DESIGNER IMMEDIATELY.
3. THIS DRAWING IS THE EXCLUSIVE PROPERTY OF THE DESIGNERS AND MAY NOT BE REPRODUCED WITHOUT THEIR WRITTEN PERMISSION. ALL WORK IS COPYRIGHTED TO 1696508 ALBERTA LTD.

client approval :

project :
PROPOSED MULTI-RESIDENTIAL DEVELOPMENT
2400 5th STREET NW
CALGARY, AB
Lots 15 - 20, Block 40, Plan 29340

drawing title :
SITE PLAN

date :	drawn by :	drawing no. :
FEB. 17, 2021	Dan Boudreau	A0
scale : AS NOTED	job file no.: -	rev. no.: .

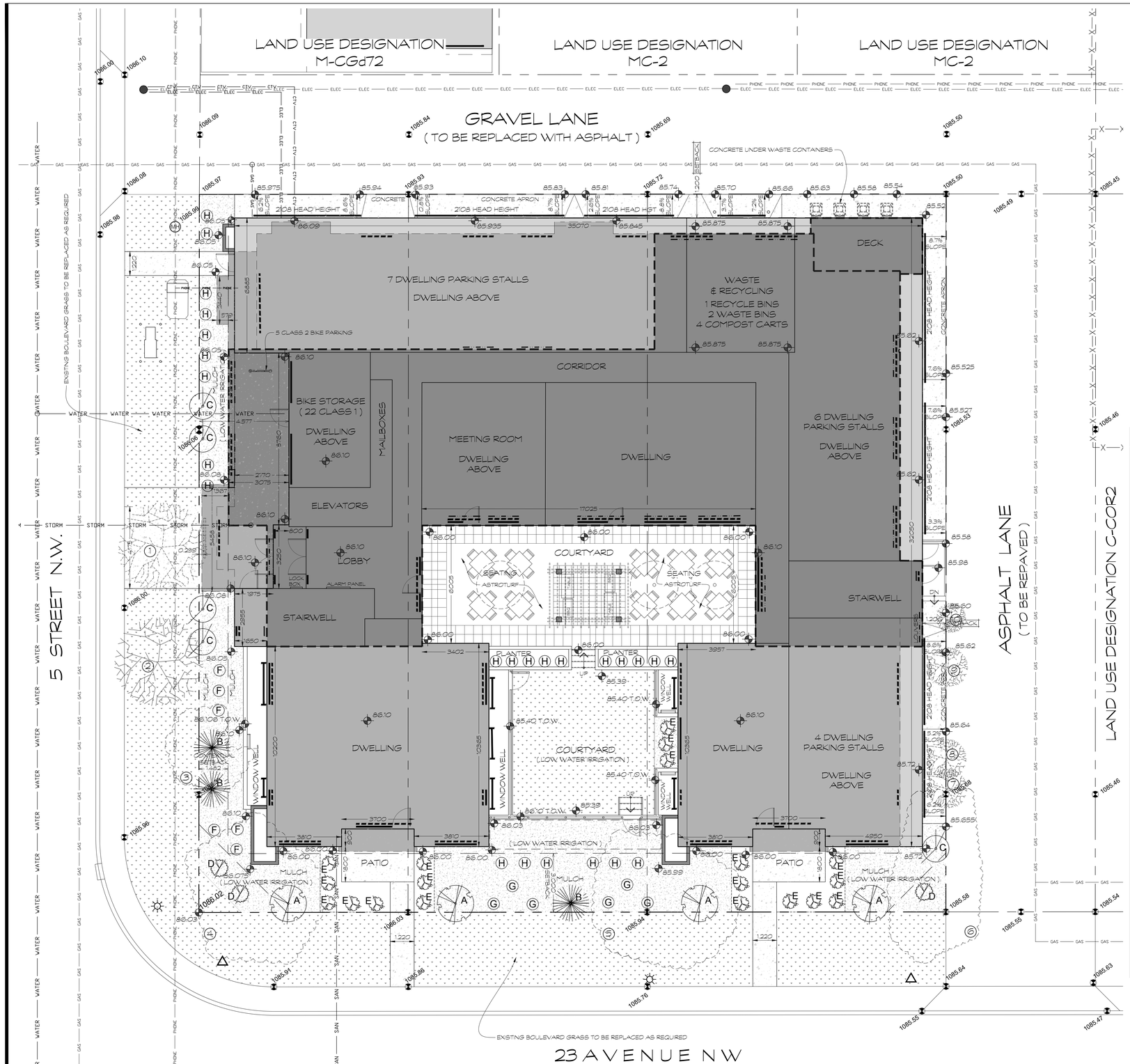

1 / A1 LANDSCAPE PLAN
1 : 100

PROPOSED PLANT SCHEDULE

A	AMUR MAPLE (4) ACER GINNALA 60mm CALIPER AT TIME OF PLANTING	D	BUFFALO JUNIPER (3) JUNIPERUS SABINA ' BUFFALO ' 5 GAL. AT TIME OF PLANTING
B	BLUE SPRUCE (3) PICEA PUNGENS 1.8m HIGH AT TIME OF PLANTING	E	ALPINE CURRANT (19) RIBES ALPINUM 2 GAL. AT TIME OF PLANTING
C	PRAIRIE SKY RISE TREMBLING ASPEN (5) POPULOUS TREMULOIDES 50mm CALIPER AT TIME OF PLANTING	F	DAY LILY (6) HEMEROCALLIS LILIOASPHODELUS
		G	BLUE FESCUE (6) FESTUCA GLAUCA
	CONCRETE	H	KARL FOERSTER GRASS (25) CALAMAGROSTIS ACUTIFLORA ' KARL FOERSTER
	457 x 457 CONCRETE PAVERS		LANDSCAPING REQUIRED : LOT = 1394.04 LESS 10% (BYLAW 553) = 1254.64 x 40% = 501.85
	305 x 305 CONCRETE PAVERS		LANDSCAPING PROVIDED : HARDSCAPE : 118.7m² SOFTSCAPE : 288.3m² TOTAL : 407.0m²
	MULCH - LOW WATER IRRIGATION		PERCENTAGE OF LANDSCAPING : 408.4m² / 1254.64m² = 32.55 %
	GRASS - LOW WATER IRRIGATION		

EXISTING PLANT SCHEDULE - ON EXISTING PUBLIC LANDS

1	EXISTING WEEPING BIRCH ' BETULA PENDULA - TO BE REMOVED CALIPER = 0.15 CANOPY = 4.5 HEIGHT = 4.0	6	EXISTING HEDGE - TO BE REMOVED CALIPER = N/A CANOPY = 2.5 HEIGHT = 2.5
2	EXISTING CRABAPPLE ' MALUS - TO REMAIN CALIPER = 0.15 CANOPY = 4.5 HEIGHT = 2.5	7	EXISTING DECIDOUS - TO BE REMOVED CALIPER = 0.10 CANOPY = 2.0 HEIGHT = 4.5
3	EXISTING BUSH - TO BE REMOVED CALIPER = N/A CANOPY = 4.5 HEIGHT = 4.0	8	EXISTING DECIDOUS - TO BE REMOVED CALIPER = 0.10 CANOPY = 2.0 HEIGHT = 4.5
4	EXISTING BUSH - TO BE REMOVED CALIPER = N/A CANOPY = 8.0 HEIGHT = 5.0	9	EXISTING DECIDOUS - TO BE REMOVED CALIPER = 0.10 CANOPY = 2.0 HEIGHT = 4.5
5	EXISTING HEDGE - TO BE REMOVED CALIPER = N/A CANOPY = 7.5 HEIGHT = 3.0	10	EXISTING DECIDOUS - TO BE REMOVED CALIPER = 0.15 CANOPY = 1.5 HEIGHT = 4.5

NOTE : ALL EXISTING TREES & SHRUBS ON EXISTING PROPERTIES TO BE REMOVED.

baboushkin design group
tel : (403) 283-4319 fax : (403) 283-3603
1310A gladstone road nw calgary alberta t2n 3g3

no.	revisions	date
.	.	.
	issued for development permit	21/02/17
	issued for building permit	.

consultants

notes :
1. THIS DRAWING MUST NOT BE SCALED
2. CONTRACTORS SHALL VERIFY ALL DIMENSIONS PRIOR TO COMMENCING WORK. ANY ERRORS OR OMISSIONS MUST BE REPORTED TO DESIGNER IMMEDIATELY.
3. THIS DRAWING IS THE EXCLUSIVE PROPERTY OF THE DESIGNERS AND MAY NOT BE REPRODUCED WITHOUT THEIR WRITTEN PERMISSION. ALL WORK IS COPYRIGHTED TO 1696508 ALBERTA LTD.

client approval :

project :
PROPOSED MULTI-RESIDENTIAL DEVELOPMENT

2400 5th STREET NW
CALGARY, AB

Lots 15 - 20, Block 40, Plan 29340

drawing title :
LANDSCAPE PLAN

date :	drawn by :	drawing no. :
FEB. 17, 2021	Dan Boudreau	A1
scale : AS NOTED	job file no. : -	rev. no. : .

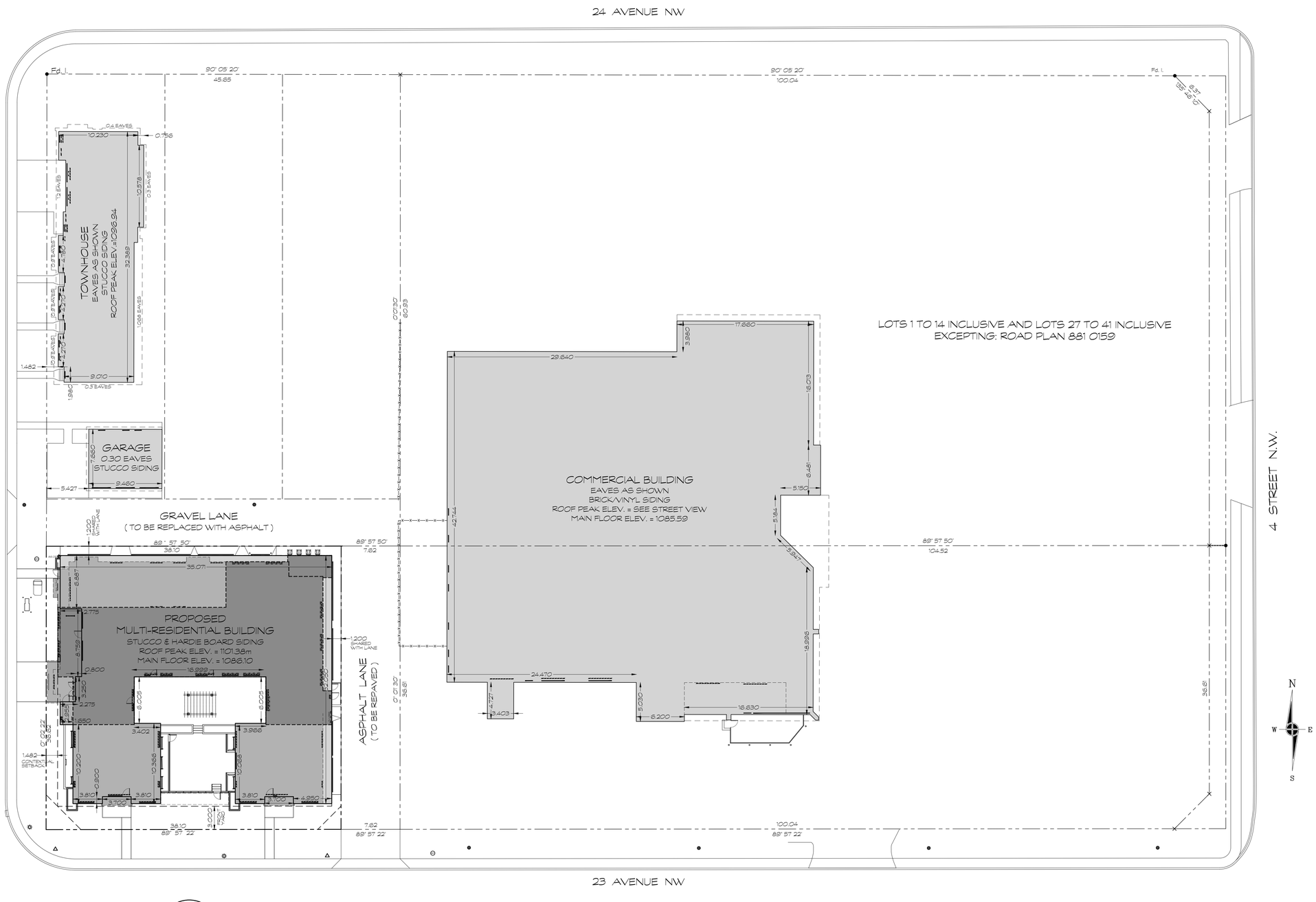

1 / A2 BLOCK PLAN

1 : 250

baboushkin design group

tel : (403) 283-4319 fax : (403) 283-3603

1310A gladstone road nw calgary alberta t2n 3g3

no.	revisions	date
.	.	.
	issued for development permit	21/02/17
	issued for building permit	.

consultants

notes :

1. THIS DRAWING MUST NOT BE SCALED
2. CONTRACTORS SHALL VERIFY ALL DIMENSIONS PRIOR TO COMMENCING WORK. ANY ERRORS OR OMISSIONS MUST BE REPORTED TO DESIGNER IMMEDIATELY.
3. THIS DRAWING IS THE EXCLUSIVE PROPERTY OF THE DESIGNERS AND MAY NOT BE REPRODUCED WITHOUT THEIR WRITTEN PERMISSION. ALL WORK IS COPYRIGHTED TO 1696508 ALBERTA LTD.

client approval :

project : PROPOSED MULTI-RESIDENTIAL DEVELOPMENT

2400 5th STREET NW
CALGARY, AB

Lots 15 - 20, Block 40, Plan 29340

drawing title : BLOCK PLAN

date :	drawn by :	drawing no. :
FEB. 17, 2021	Dan Boudreau	A2
scale : AS NOTED	job file no. : -	rev. no. : .

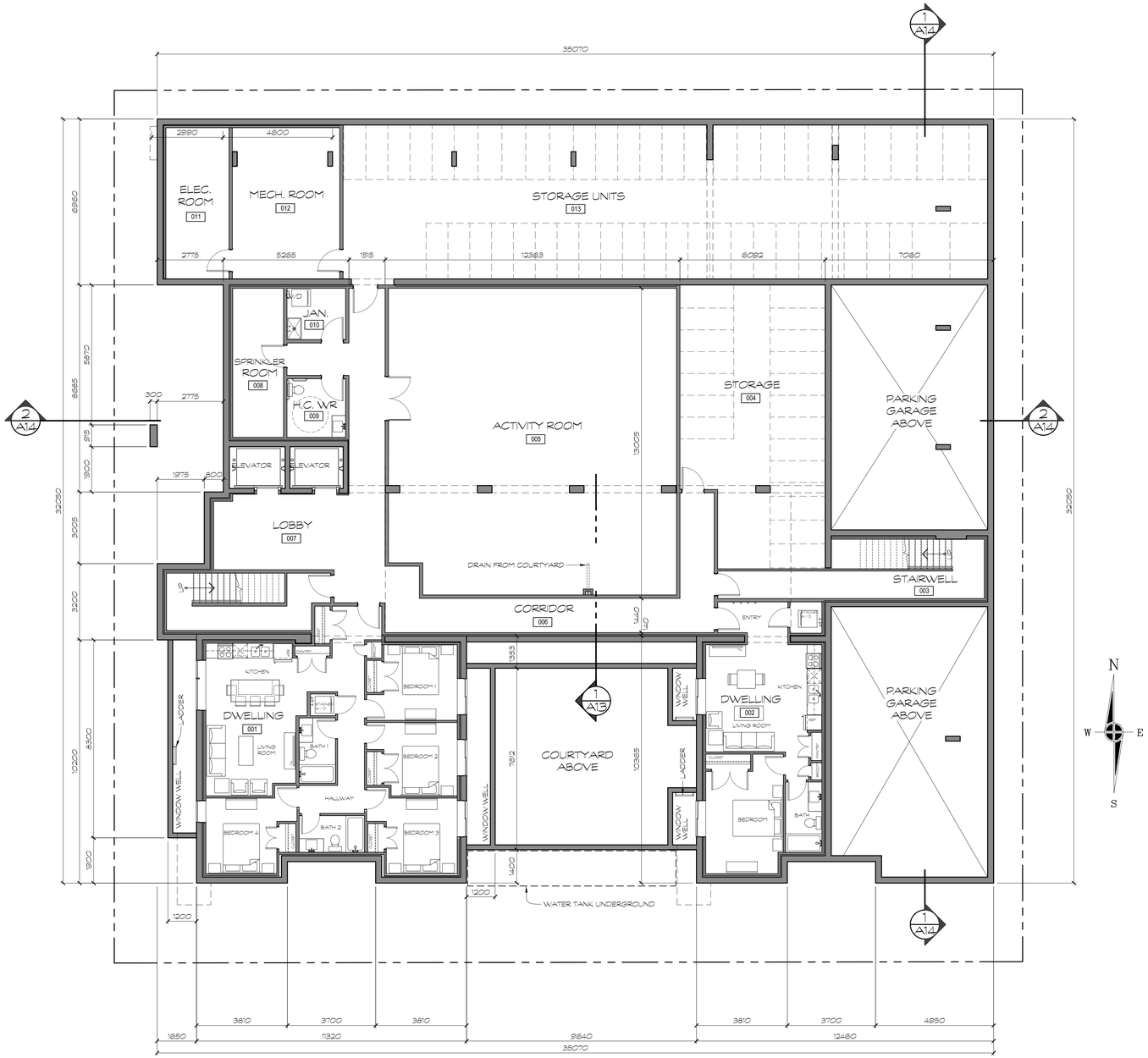

1 A3 LOWER FLOOR PLAN
1 : 100

baboushkin design group
tel : (403) 283-4319 fax : (403) 283-3603
1310A gladstone road nw calgary alberta t2n 3g3

no.	revisions	date
.	.	.
	issued for development permit	21/02/17
	issued for building permit	.

consultants

notes :
1. THIS DRAWING MUST NOT BE SCALED
2. CONTRACTORS SHALL VERIFY ALL DIMENSIONS PRIOR TO COMMENCING WORK. ANY ERRORS OR OMISSIONS MUST BE REPORTED TO DESIGNER IMMEDIATELY.
3. THIS DRAWING IS THE EXCLUSIVE PROPERTY OF THE DESIGNERS AND MAY NOT BE REPRODUCED WITHOUT THEIR WRITTEN PERMISSION. ALL WORK IS COPYRIGHTED TO 1696508 ALBERTA LTD.

client approval :

project :
PROPOSED MULTI-RESIDENTIAL DEVELOPMENT
2400 5th STREET NW
CALGARY, AB
Lots 15 - 20, Block 40, Plan 29340

drawing title :
LOWER FLOOR PLAN

date :	drawn by :	drawing no. :
FEB. 17, 2021	Dan Boudreau	A3
scale : AS NOTED	job file no.: -	rev. no.: .

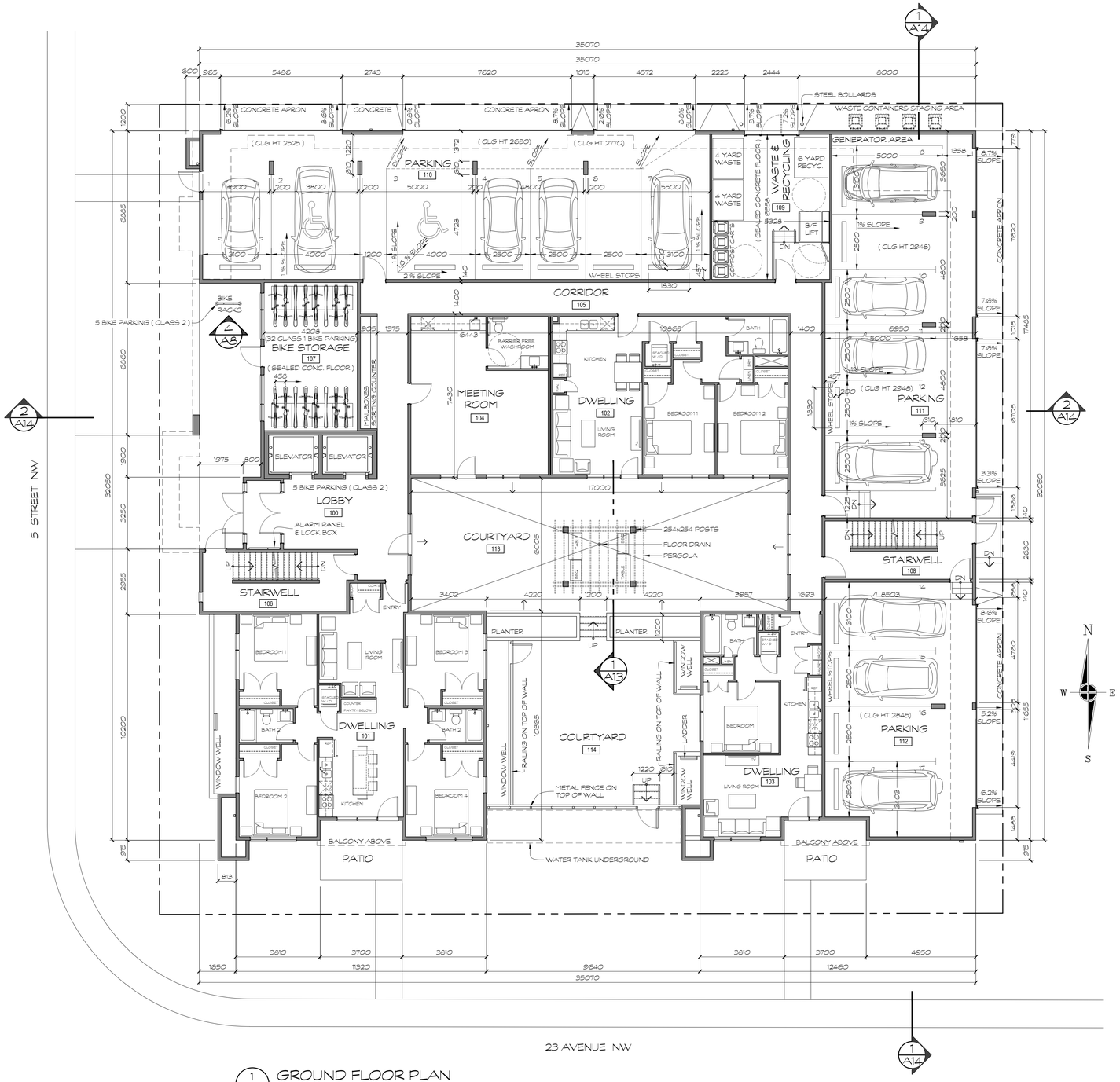

1 A4 GROUND FLOOR PLAN
1 : 100 513.47m²

baboushkin design group
tel : (403) 283-4319 fax : (403) 283-3603
1310A gladstone road nw calgary alberta t2n 3g3

no.	revisions	date
.	.	.
	issued for development permit	21/02/17
	issued for building permit	.

consultants

notes :
1. THIS DRAWING MUST NOT BE SCALED
2. CONTRACTORS SHALL VERIFY ALL DIMENSIONS PRIOR TO COMMENCING WORK. ANY ERRORS OR OMISSIONS MUST BE REPORTED TO DESIGNER IMMEDIATELY.
3. THIS DRAWING IS THE EXCLUSIVE PROPERTY OF THE DESIGNERS AND MAY NOT BE REPRODUCED WITHOUT THEIR WRITTEN PERMISSION. ALL WORK IS COPYRIGHTED TO 1696508 ALBERTA LTD.

client approval :

project : PROPOSED MULTI-RESIDENTIAL DEVELOPMENT

2400 5th STREET NW
CALGARY, AB

Lots 15 - 20, Block 40, Plan 29340

drawing title : MAIN FLOOR PLAN

date :	drawn by :	drawing no. :
FEB. 17, 2021	Dan Boudreau	A4
scale : AS NOTED	job file no. : -	rev. no. : .

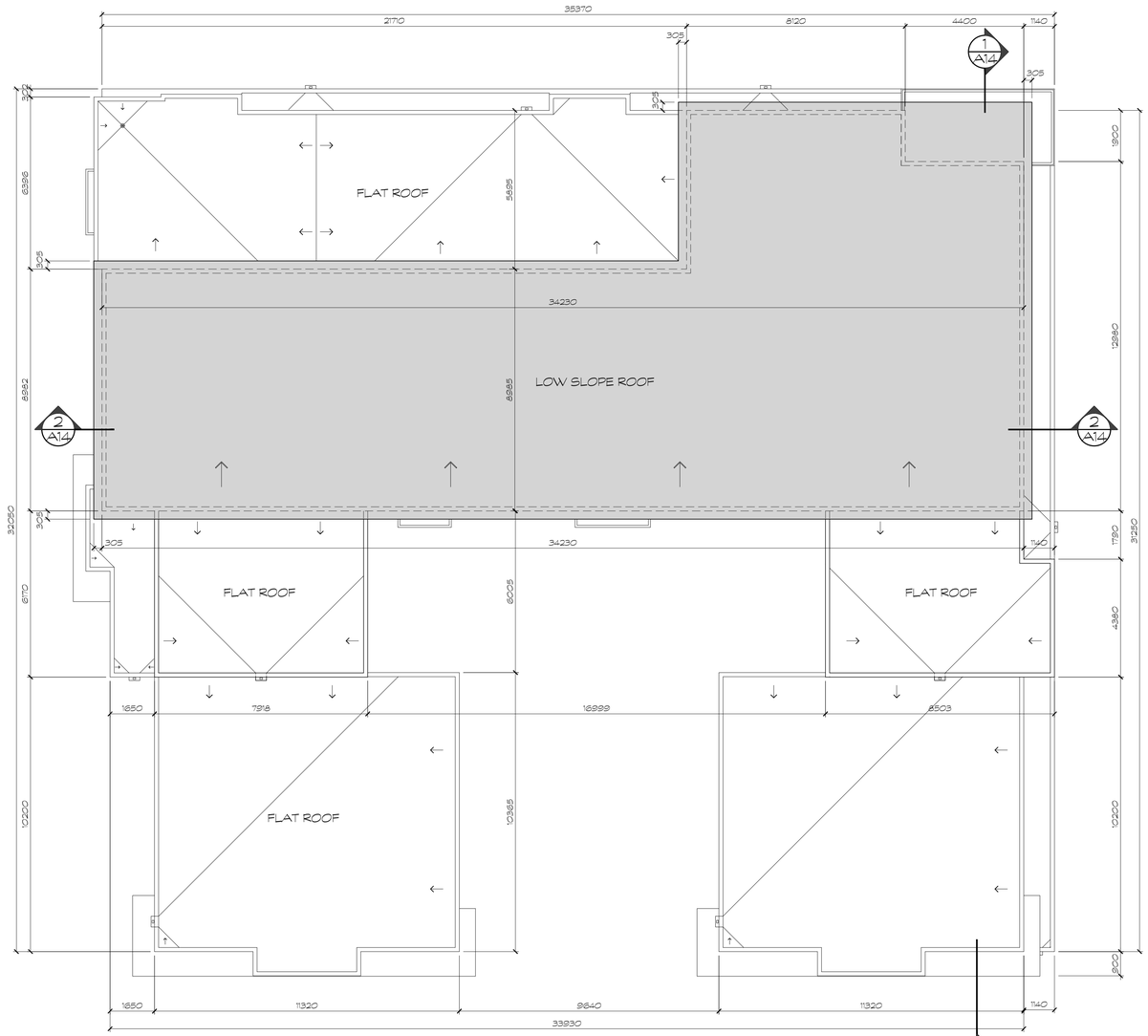

1 A8 5th FLOOR ROOF PLAN
1 : 100

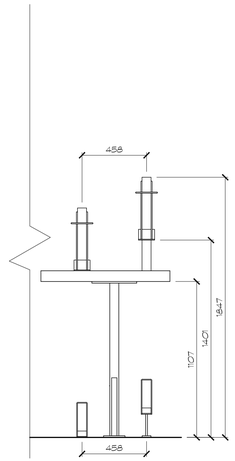

2 A8 INTERIOR BIKE RACK FRONT ELEVATION
1 : 20 4 BIKE CAPACITY EACH

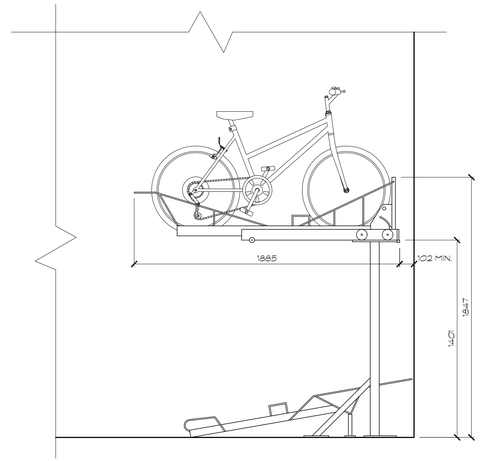

3 A8 INTERIOR BIKE RACK SIDE ELEVATION
1 : 20 4 BIKE CAPACITY EACH

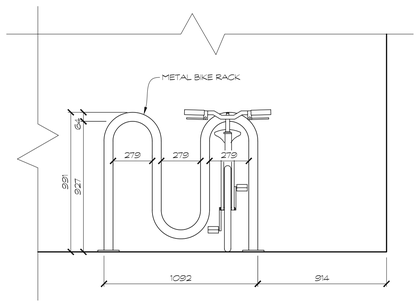

4 A8 EXTERIOR BIKE RACK FRONT ELEV.
1 : 20 5 BIKE CAPACITY

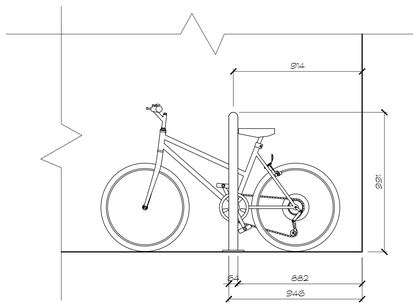

5 A8 EXTERIOR BIKE RACK SIDE ELEV.
1 : 20 5 BIKE CAPACITY

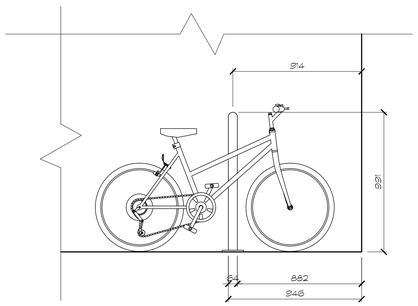

6 A8 EXTERIOR BIKE RACK SIDE ELEV.
1 : 20 5 BIKE CAPACITY

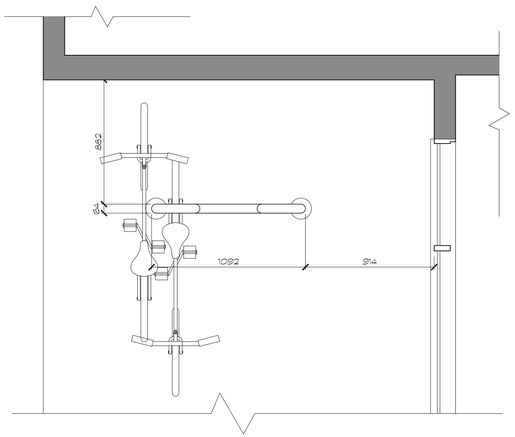

7 A8 EXTRIOR BIKE RACK PLAN - 5 BIKE
1 : 20

baboushkin design group
tel : (403) 283-4319 fax : (403) 283-3603
1310A gladstone road nw calgary alberta t2n 3g3

no.	revisions	date
.	.	.
	issued for development permit	21/02/17
	issued for building permit	.

consultants

notes :
1. THIS DRAWING MUST NOT BE SCALED
2. CONTRACTORS SHALL VERIFY ALL DIMENSIONS PRIOR TO COMMENCING WORK. ANY ERRORS OR OMISSIONS MUST BE REPORTED TO DESIGNER IMMEDIATELY.
3. THIS DRAWING IS THE EXCLUSIVE PROPERTY OF THE DESIGNERS AND MAY NOT BE REPRODUCED WITHOUT THEIR WRITTEN PERMISSION. ALL WORK IS COPYRIGHTED TO 1696508 ALBERTA LTD.

client approval :

project : PROPOSED MULTI-RESIDENTIAL DEVELOPMENT

2400 5th STREET NW
CALGARY, AB

Lots 15 - 20, Block 40, Plan 29340

drawing title :
5th FLOOR ROOF PLAN
BIKE RACK DETAILS

date :	drawn by :	drawing no. :
FEB. 17, 2021	Dan Boudreau	A8
scale : AS NOTED	job file no.: -	rev. no.: .

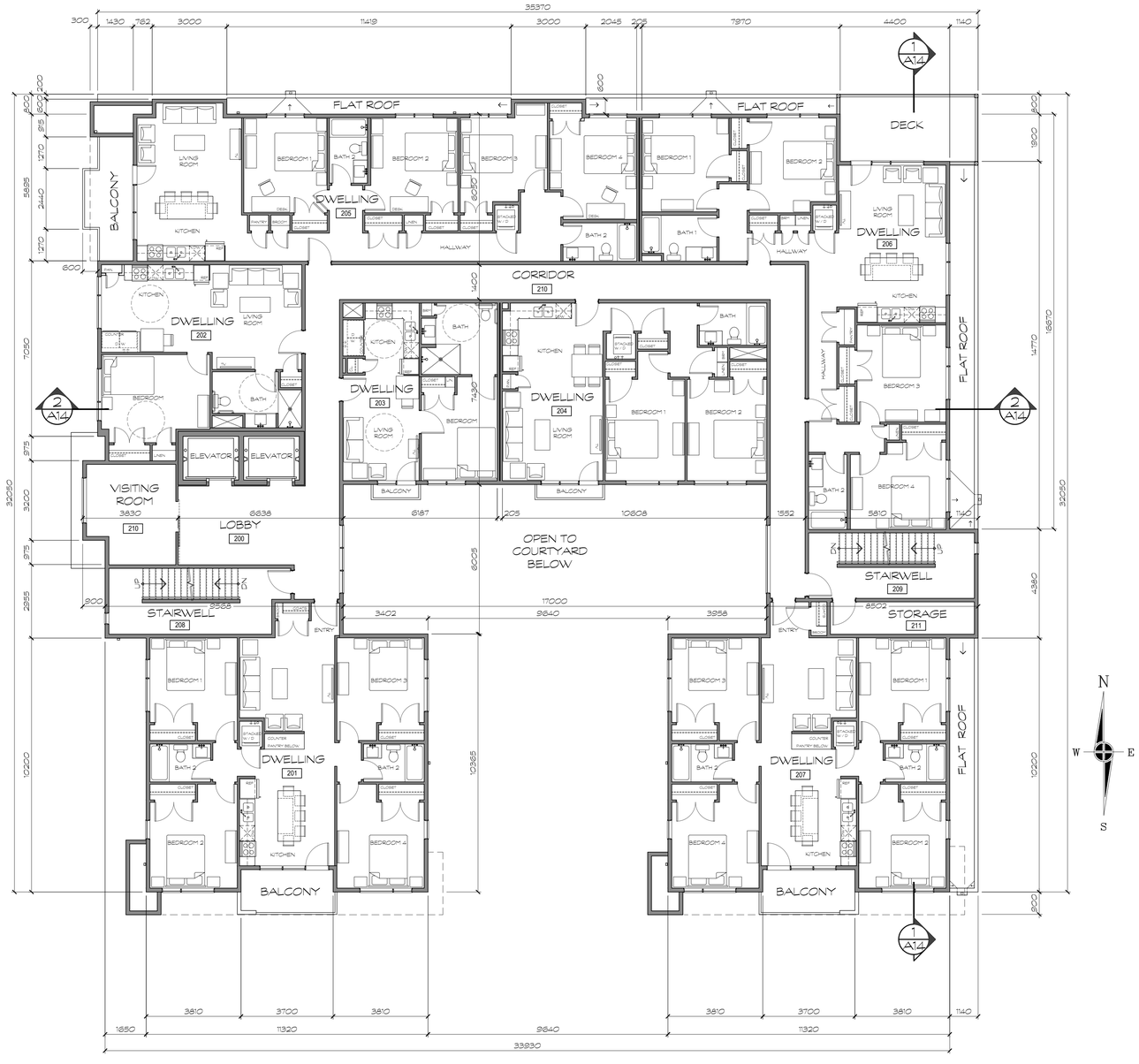

1 A5 2nd & 3rd FLOOR PLAN
1 : 100 833.33m²

baboushkin design group
tel : (403) 283-4319 fax : (403) 283-3603
1310A gladstone road nw calgary alberta t2n 3g3

no.	revisions	date
.	.	.
	issued for development permit	21/02/17
	issued for building permit	.

consultants

notes :
1. THIS DRAWING MUST NOT BE SCALED
2. CONTRACTORS SHALL VERIFY ALL DIMENSIONS PRIOR TO COMMENCING WORK. ANY ERRORS OR OMISSIONS MUST BE REPORTED TO DESIGNER IMMEDIATELY.
3. THIS DRAWING IS THE EXCLUSIVE PROPERTY OF THE DESIGNERS AND MAY NOT BE REPRODUCED WITHOUT THEIR WRITTEN PERMISSION. ALL WORK IS COPYRIGHTED TO 1696508 ALBERTA LTD.

client approval :

project :
PROPOSED MULTI-RESIDENTIAL DEVELOPMENT

2400 5th STREET NW
CALGARY, AB
Lots 15 - 20, Block 40, Plan 29340

drawing title :
2dn & 3rd FLOOR PLAN

date :	drawn by :	drawing no. :
FEB. 17, 2021	Dan Boudreau	A5
scale : AS NOTED	job file no.: -	rev. no.: .

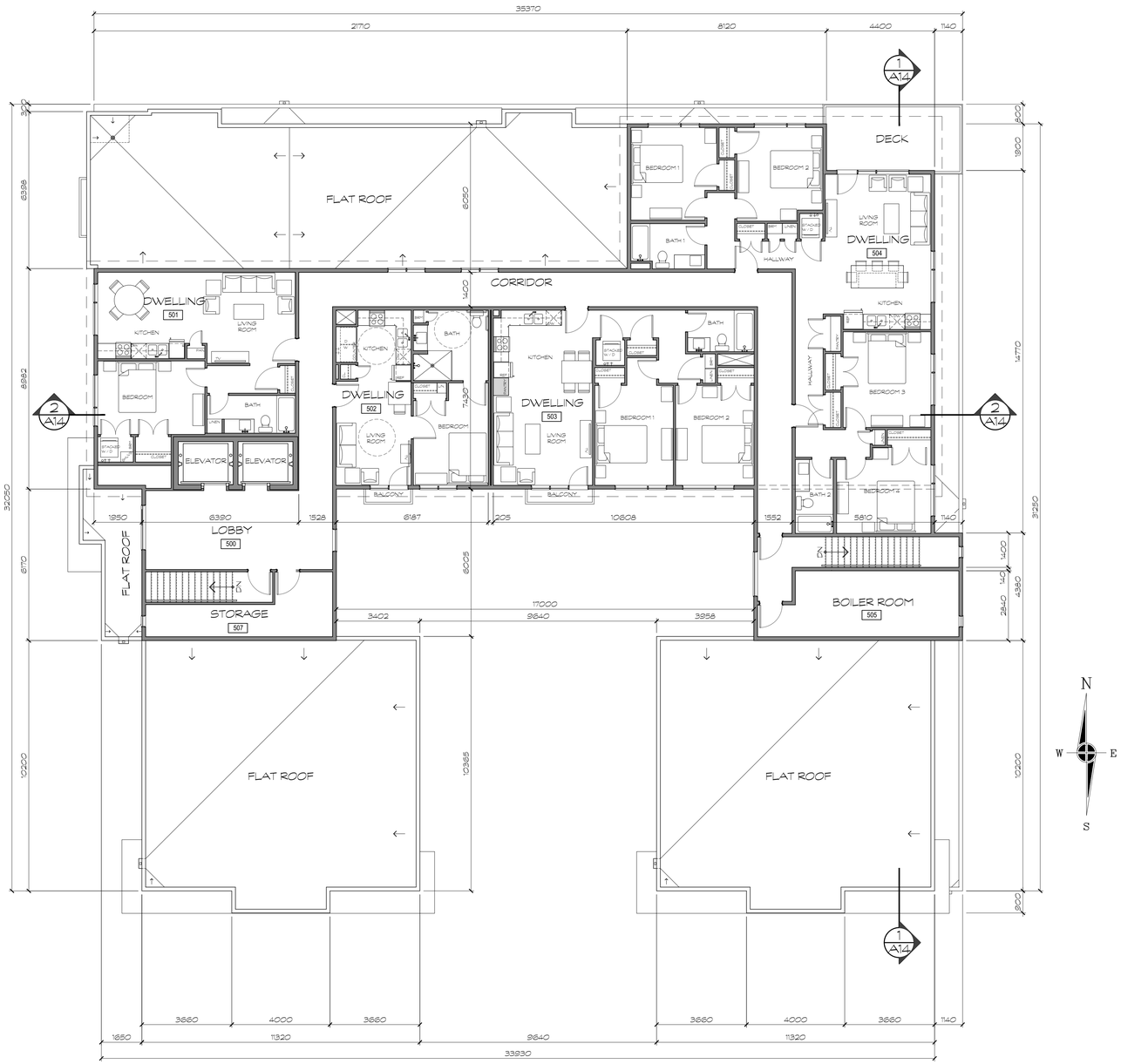

1 A7 5th FLOOR PLAN

1 : 100 472.18m²

baboushkin design group

tel : (403) 283-4319 fax : (403) 283-3603

1310A gladstone road nw calgary alberta t2n 3g3

no.	revisions	date
.	.	.
	issued for development permit	21/02/17
	issued for building permit	.

consultants

notes :

1. THIS DRAWING MUST NOT BE SCALED
2. CONTRACTORS SHALL VERIFY ALL DIMENSIONS PRIOR TO COMMENCING WORK. ANY ERRORS OR OMISSIONS MUST BE REPORTED TO DESIGNER IMMEDIATELY.
3. THIS DRAWING IS THE EXCLUSIVE PROPERTY OF THE DESIGNERS AND MAY NOT BE REPRODUCED WITHOUT THEIR WRITTEN PERMISSION. ALL WORK IS COPYRIGHTED TO 1696508 ALBERTA LTD.

client approval :

project : PROPOSED MULTI-RESIDENTIAL DEVELOPMENT

2400 5th STREET NW
CALGARY, AB

Lots 15 - 20, Block 40, Plan 29340

drawing title :

5th FLOOR PLAN

date :	drawn by :	drawing no. :
FEB. 17, 2021	Dan Boudreau	A7
scale : AS NOTED	job file no.: -	rev. no.: .

1 A9 WEST ELEVATION
1 : 100

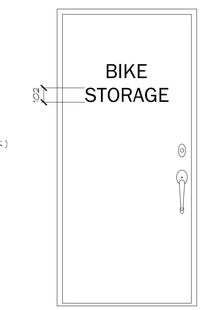

3 A9 BIKE ROOM DOOR SIGNAGE
1 : 20

2 A9 SOUTH ELEVATION
1 : 100

baboushkin design group
tel : (403) 283-4319 fax : (403) 283-3603
1310A gladstone road nw calgary alberta t2n 3g3

no.	revisions	date
.	.	.
	issued for development permit	21/02/17
	issued for building permit	.

consultants

notes :
1. THIS DRAWING MUST NOT BE SCALED
2. CONTRACTORS SHALL VERIFY ALL DIMENSIONS PRIOR TO COMMENCING WORK. ANY ERRORS OR OMISSIONS MUST BE REPORTED TO DESIGNER IMMEDIATELY.
3. THIS DRAWING IS THE EXCLUSIVE PROPERTY OF THE DESIGNERS AND MAY NOT BE REPRODUCED WITHOUT THEIR WRITTEN PERMISSION. ALL WORK IS COPYRIGHTED TO 1696508 ALBERTA LTD.

client approval :

project :
PROPOSED MULTI-RESIDENTIAL DEVELOPMENT
2400 5th STREET NW
CALGARY, AB
Lots 15 - 20, Block 40, Plan 29340

drawing title :
WEST ELEVATION
SOUTH ELEVATION

date :	drawn by :	drawing no. :
FEB. 17, 2021	Dan Boudreau	A9
scale :	job file no.:	rev. no.:
AS NOTED	-	.

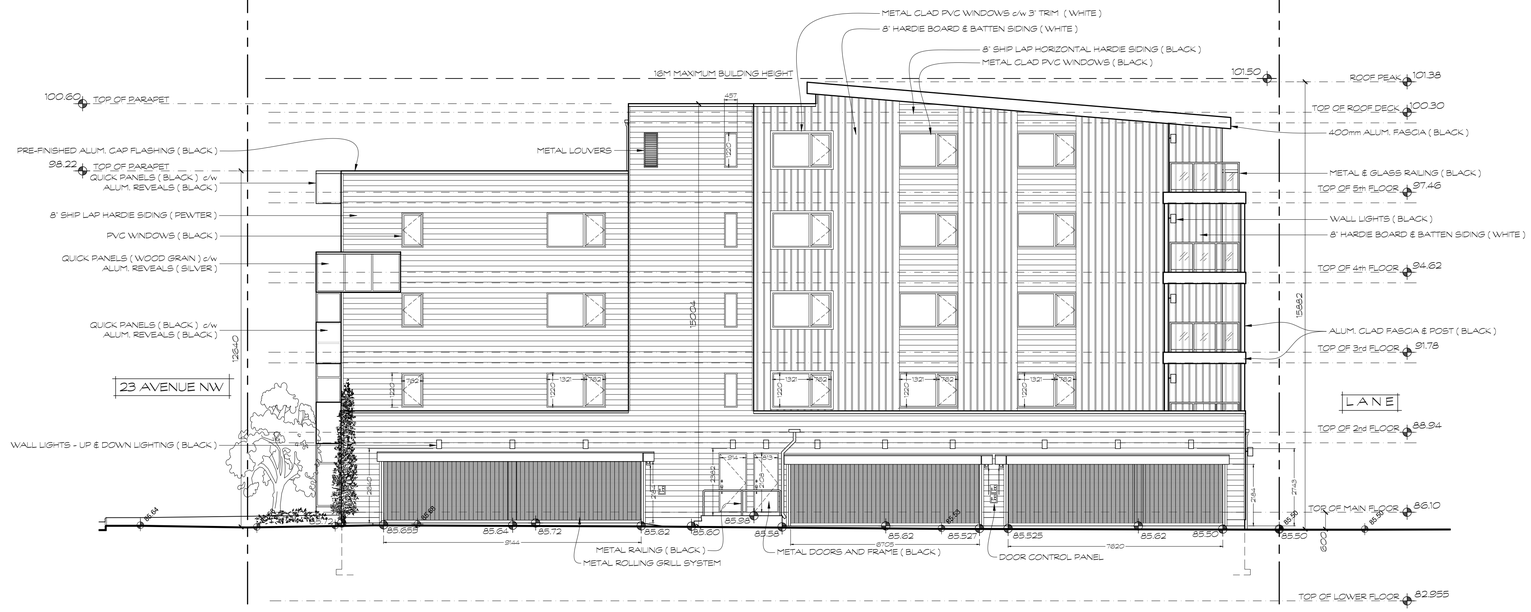

1 A10 EAST ELEVATION
1 : 100

2 A10 NORTH ELEVATION
1 : 100

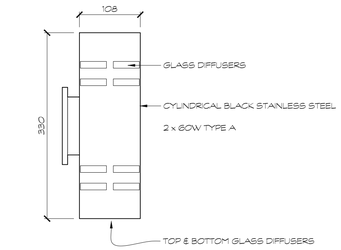

3 A10 BALCONY AND WALL LIGHTS
1 : 5

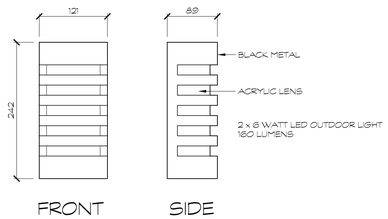

4 A10 LIGHTS ABOVE GARAGE DOOR
1 : 5

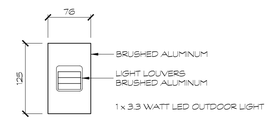

5 A10 ACCENT LIGHTING
1 : 5

baboushkin design group
tel : (403) 283-4319 fax : (403) 283-3603
1310A gladstone road nw calgary alberta t2n 3g3

no.	revisions	date
.	.	.
	issued for development permit	21/02/17
	issued for building permit	.

consultants

notes :
1. THIS DRAWING MUST NOT BE SCALED
2. CONTRACTORS SHALL VERIFY ALL DIMENSIONS PRIOR TO COMMENCING WORK. ANY ERRORS OR OMISSIONS MUST BE REPORTED TO DESIGNER IMMEDIATELY.
3. THIS DRAWING IS THE EXCLUSIVE PROPERTY OF THE DESIGNERS AND MAY NOT BE REPRODUCED WITHOUT THEIR WRITTEN PERMISSION. ALL WORK IS COPYRIGHTED TO 1696508 ALBERTA LTD.

client approval :

project :
PROPOSED MULTI-RESIDENTIAL DEVELOPMENT
2400 5th STREET NW
CALGARY, AB
Lots 15 - 20, Block 40, Plan 29340

drawing title :
EAST ELEVATION
NORTH ELEVATION
LIGHTING DETAILS

date :	drawn by :	drawing no. :
FEB. 17, 2021	Dan Boudreau	A10
scale : AS NOTED	job file no.: -	rev. no.: .

1 A11 EAST FACING COURTYARD ELEVATION & BOULEVARD SECTION
1 : 100

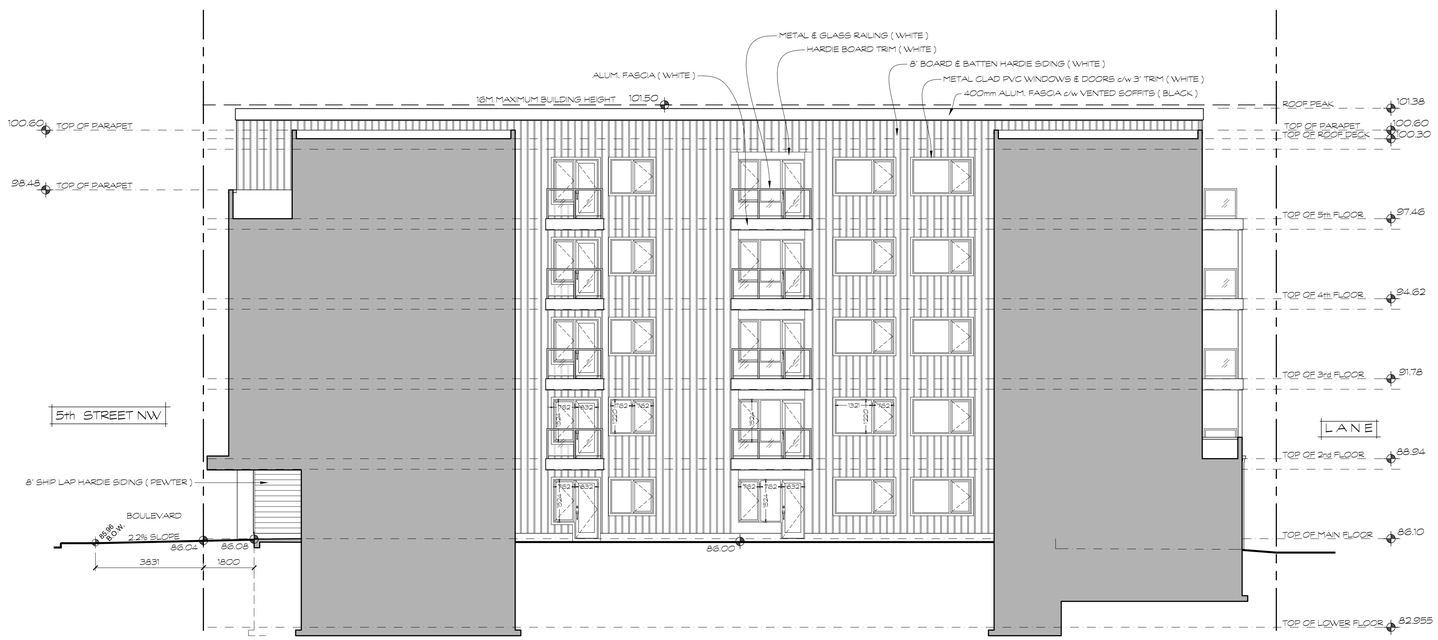

2 A11 SOUTH FACING COURTYARD ELEVATION & BOULEVARD SECTION
1 : 100

baboushkin design group
tel : (403) 283-4319 fax : (403) 283-3603
1310A gladstone road nw calgary alberta t2n 3g3

no.	revisions	date
.	.	.
	issued for development permit	21/02/17
	issued for building permit	.

consultants

notes :
1. THIS DRAWING MUST NOT BE SCALED
2. CONTRACTORS SHALL VERIFY ALL DIMENSIONS PRIOR TO COMMENCING WORK. ANY ERRORS OR OMISSIONS MUST BE REPORTED TO DESIGNER IMMEDIATELY.
3. THIS DRAWING IS THE EXCLUSIVE PROPERTY OF THE DESIGNERS AND MAY NOT BE REPRODUCED WITHOUT THEIR WRITTEN PERMISSION. ALL WORK IS COPYRIGHTED TO 1696508 ALBERTA LTD.

client approval :

project : PROPOSED MULTI-RESIDENTIAL DEVELOPMENT

2400 5th STREET NW
CALGARY, AB

Lots 15 - 20, Block 40, Plan 29340

drawing title :
COURTYARD ELEV'S

date :	drawn by :	drawing no. :
FEB. 17, 2021	Dan Boudreau	A11
scale : AS NOTED	job file no. : -	rev. no. : .

1 A12 WEST FACING COURTYARD ELEVATION & BOULEVARD SECTION
1 : 100

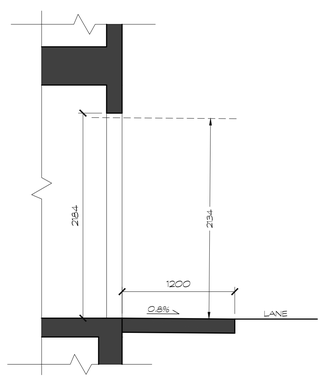

2 A12 SECTION @ 0.8% SLOPED APRON
1 : 30

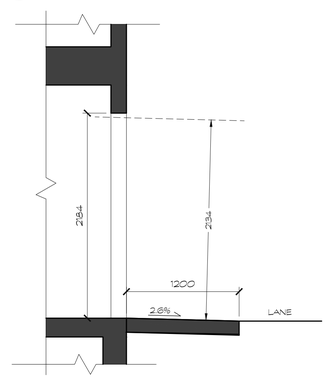

3 A12 SECTION @ 2.6% SLOPED APRON
1 : 30

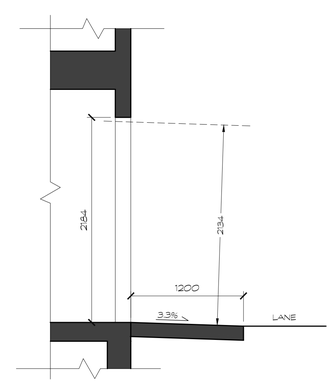

4 A12 SECTION @ 3.3% SLOPED APRON
1 : 30

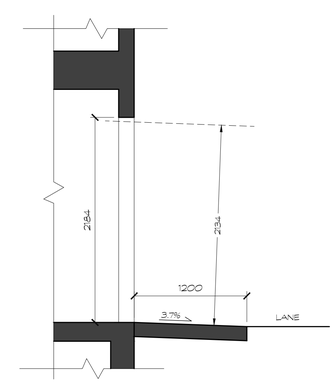

5 A12 SECTION @ 3.7% SLOPED APRON
1 : 30

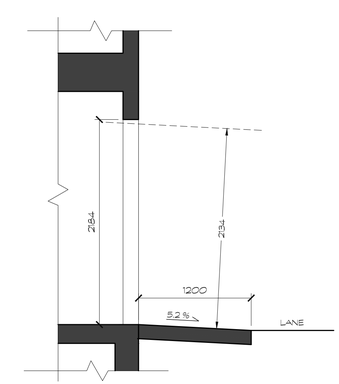

6 A12 SECTION @ 5.2 % SLOPED APRON
1 : 30

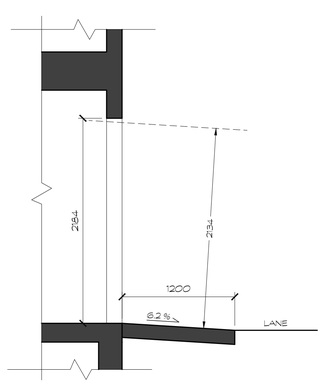

7 A12 SECTION @ 6.2% SLOPED APRON
1 : 30

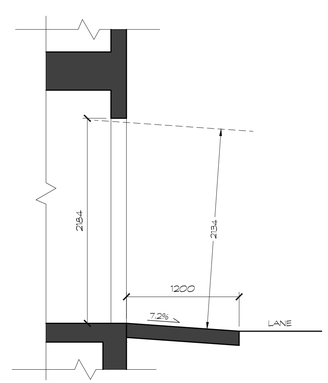

8 A12 SECTION @ 7.2% SLOPED APRON
1 : 30

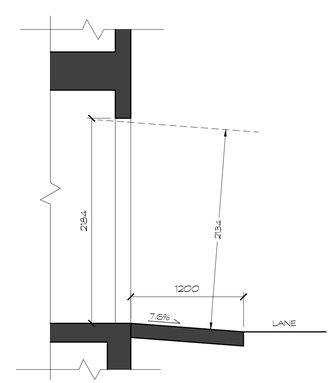

9 A12 SECTION @ 7.6% SLOPED APRON
1 : 30

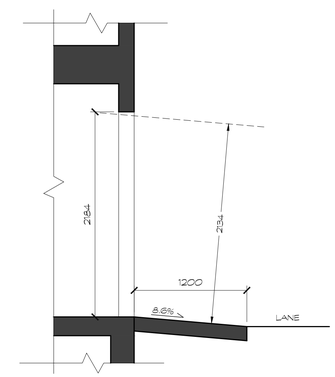

10 A12 SECTION @ 8.6% SLOPED APRON
1 : 30

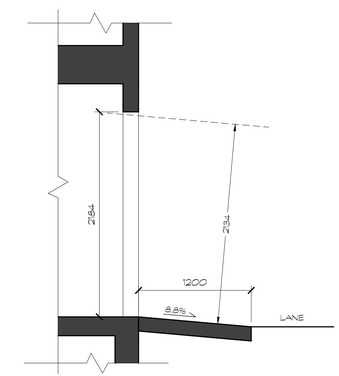

11 A12 SECTION @ 8.8% SLOPED APRON
1 : 30

baboushkin design group
tel : (403) 283-4319 fax : (403) 283-3603
1310A gladstone road nw calgary alberta t2n 3g3

no.	revisions	date
.	.	.
	issued for development permit	21/02/17
	issued for building permit	.

consultants

notes :
1. THIS DRAWING MUST NOT BE SCALED
2. CONTRACTORS SHALL VERIFY ALL DIMENSIONS PRIOR TO COMMENCING WORK. ANY ERRORS OR OMISSIONS MUST BE REPORTED TO DESIGNER IMMEDIATELY.
3. THIS DRAWING IS THE EXCLUSIVE PROPERTY OF THE DESIGNERS AND MAY NOT BE REPRODUCED WITHOUT THEIR WRITTEN PERMISSION. ALL WORK IS COPYRIGHTED TO 1696508 ALBERTA LTD.

client approval :

project : PROPOSED MULTI-RESIDENTIAL DEVELOPMENT

2400 5th STREET NW
CALGARY, AB

Lots 15 - 20, Block 40, Plan 29340

drawing title : COURTYARD ELEV. SLOPING APRON SECTIONS

date :	drawn by :	drawing no. :
FEB. 17, 2021	Dan Boudreau	A12
scale : AS NOTED	job file no.: -	rev. no.: .

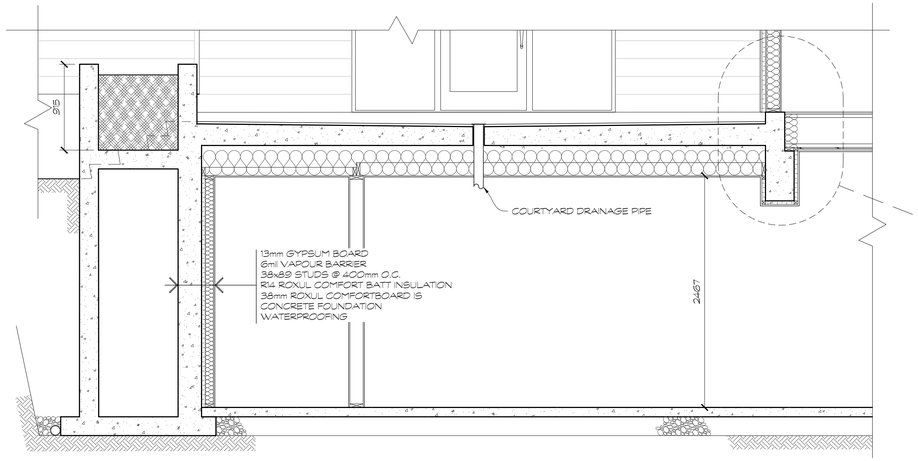

1 / A13 BUILDING SECTION THROUGH COURTYARD
1 : 30

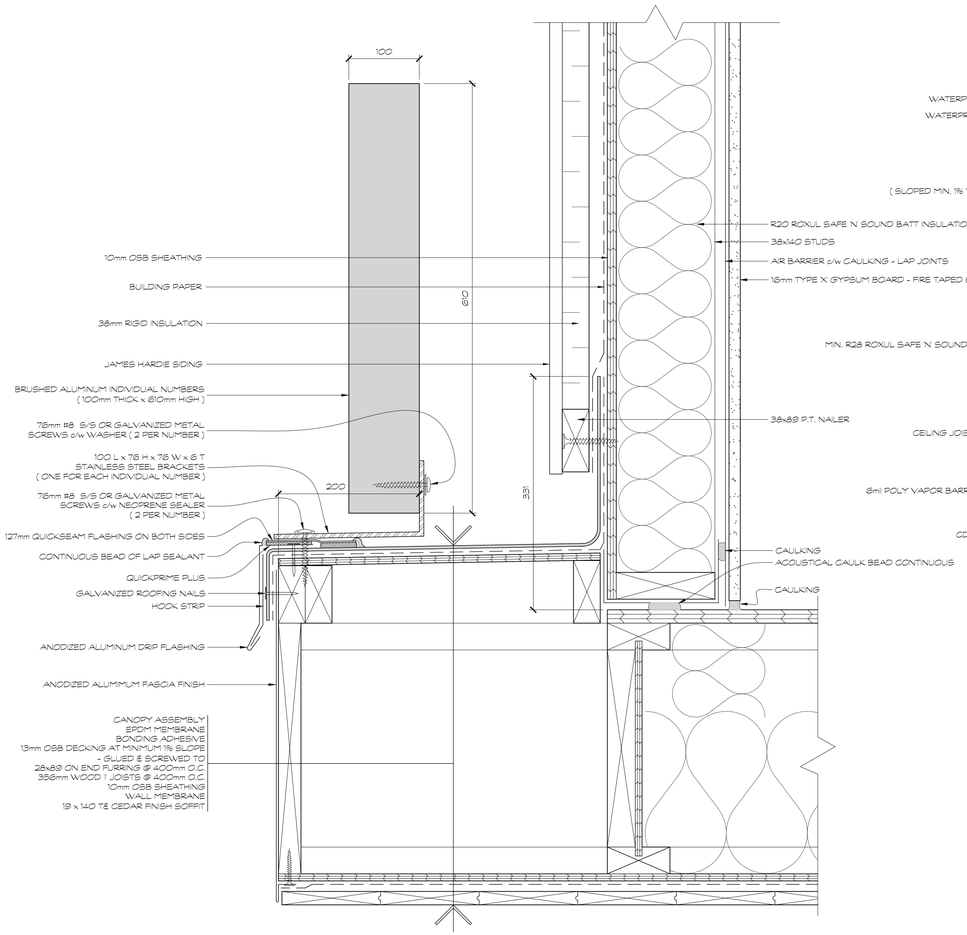

2 / A13 CANOPY / SIGNAGE DETAIL
1 : 4

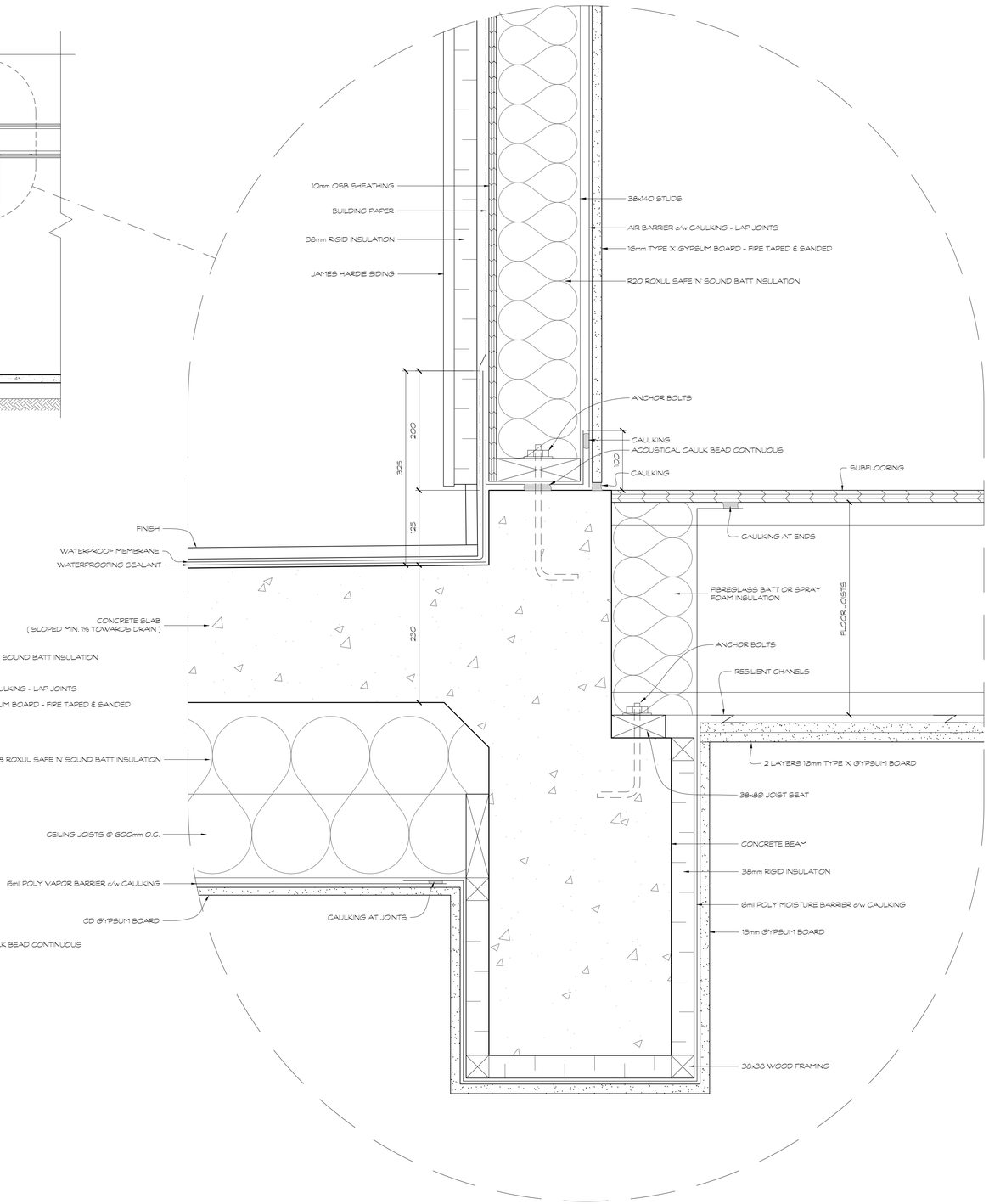

3 / A13 WALL FLASHING & COURTYARD SLAB DETAIL
1 : 4

baboushkin design group
tel : (403) 283-4319 fax : (403) 283-3603
1310A gladstone road nw calgary alberta t2n 3g3

no.	revisions	date
.	.	.
	issued for development permit	21/02/17
	issued for building permit	.

consultants

notes :
1. THIS DRAWING MUST NOT BE SCALED
2. CONTRACTORS SHALL VERIFY ALL DIMENSIONS PRIOR TO COMMENCING WORK. ANY ERRORS OR OMISSIONS MUST BE REPORTED TO DESIGNER IMMEDIATELY.
3. THIS DRAWING IS THE EXCLUSIVE PROPERTY OF THE DESIGNERS AND MAY NOT BE REPRODUCED WITHOUT THEIR WRITTEN PERMISSION. ALL WORK IS COPYRIGHTED TO 1696508 ALBERTA LTD.

client approval :

project : PROPOSED MULTI-RESIDENTIAL DEVELOPMENT

2400 5th STREET NW
CALGARY, AB

Lots 15 - 20, Block 40, Plan 29340

drawing title :
COURTYARD SLAB SECTION & DETAIL

date :	drawn by :	drawing no. :
FEB. 17, 2021	Dan Boudreau	A13
scale : AS NOTED	job file no.: -	rev. no.: .

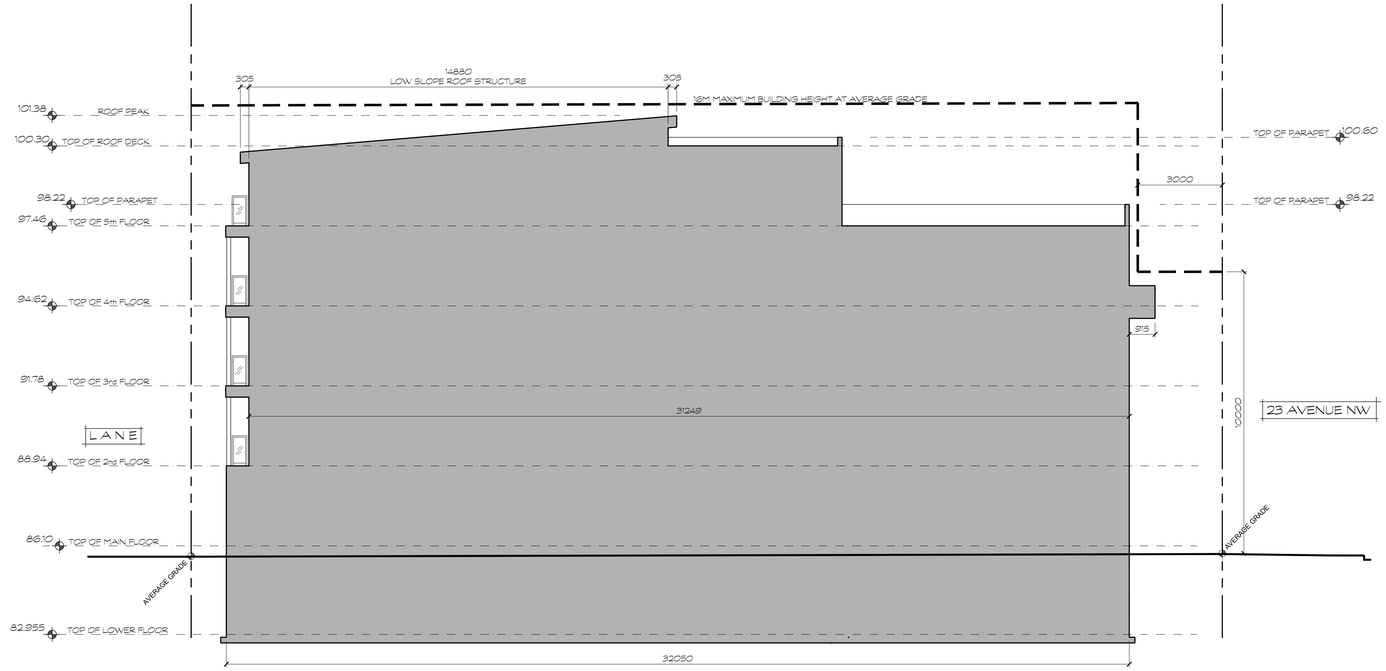

1 / A14 NORTH SOUTH BUILDING SECTION - EAST SIDE
1 : 100
AREA OF CROSS SECTION = 536.3m²

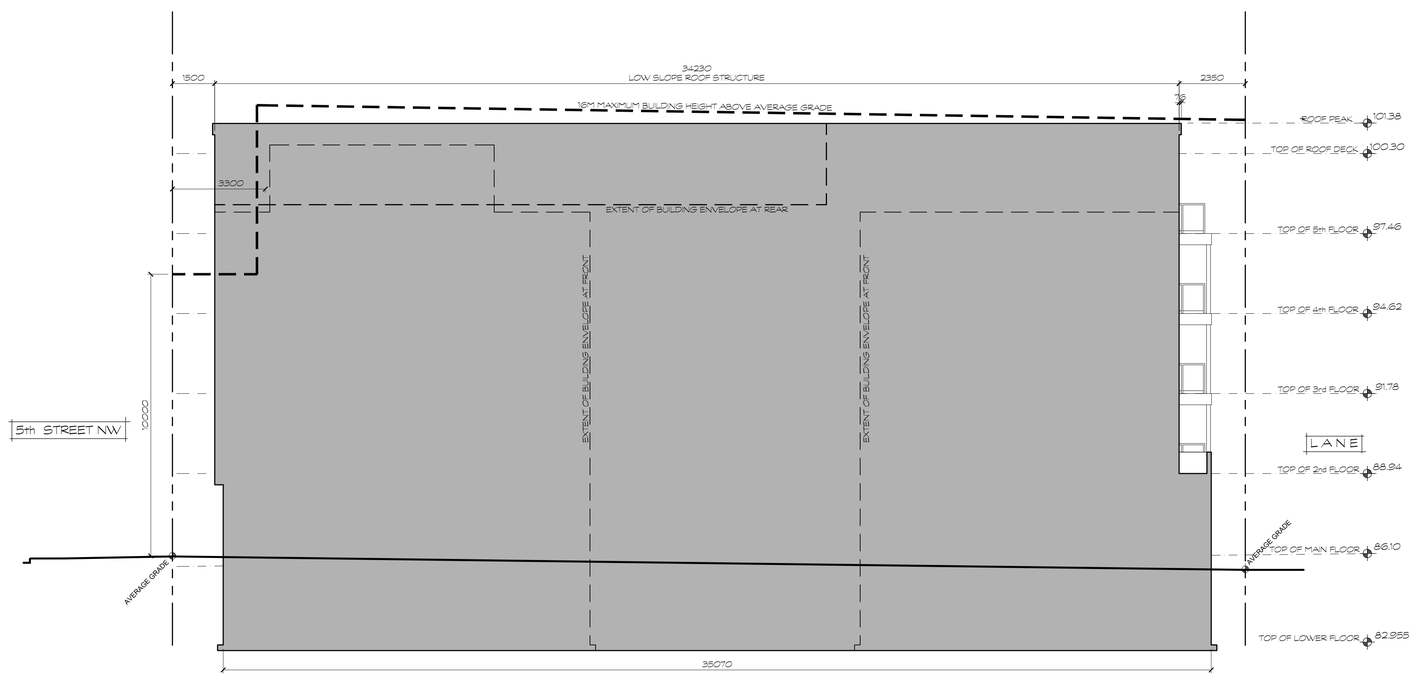

2 / A14 EAST WEST CROSS SECTION - NORTH END
1 : 100
AREA OF CROSS SECTION = 646.2m²

baboushkin design group
tel : (403) 283-4319 fax : (403) 283-3603
1310A gladstone road nw calgary alberta t2n 3g3

no.	revisions	date
.	.	.
	issued for development permit	21/02/17
	issued for building permit	.

consultants

notes :
1. THIS DRAWING MUST NOT BE SCALED
2. CONTRACTORS SHALL VERIFY ALL DIMENSIONS PRIOR TO COMMENCING WORK. ANY ERRORS OR OMISSIONS MUST BE REPORTED TO DESIGNER IMMEDIATELY.
3. THIS DRAWING IS THE EXCLUSIVE PROPERTY OF THE DESIGNERS AND MAY NOT BE REPRODUCED WITHOUT THEIR WRITTEN PERMISSION. ALL WORK IS COPYRIGHTED TO 1696508 ALBERTA LTD.

client approval :

project :
PROPOSED MULTI-RESIDENTIAL DEVELOPMENT
2400 5th STREET NW
CALGARY, AB
Lots 15 - 20, Block 40, Plan 29340

drawing title :
BUILDING CROSS SECTIONS

date :	drawn by :	drawing no. :
FEB. 17, 2021	Dan Boudreau	A14
scale : AS NOTED	job file no.: -	rev. no.: .

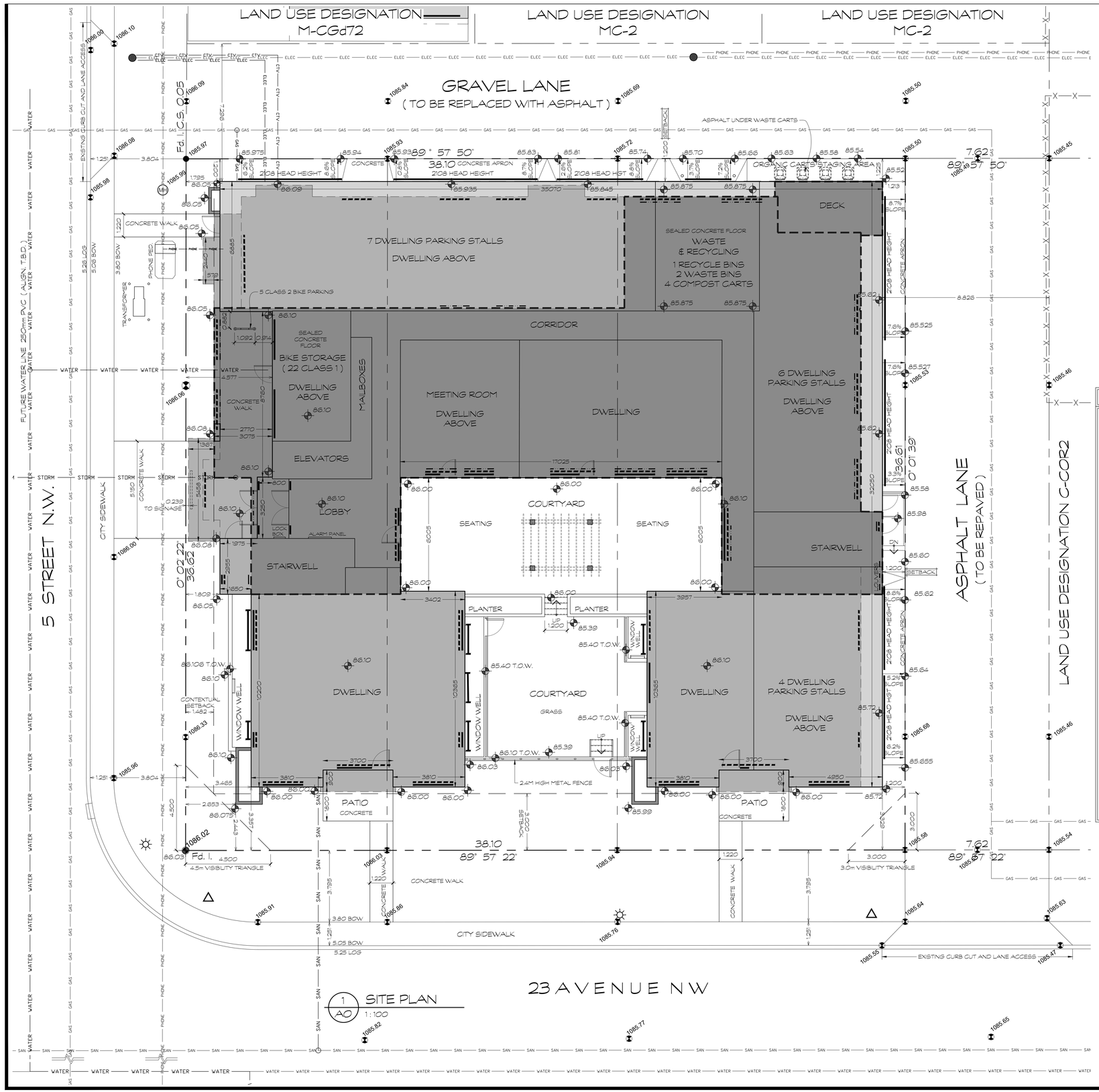

1 AO SITE PLAN
1 : 100

UTILITIES SCHEDULE		
GAS	GAS / GAS	EXISTING UNDERGROUND.
	GAS / GAS	EXISTING TO BE REMOVED
	GAS / GAS	NEW LOCATION.
ELEC	ELEC / ELEC	EXISTING UNDERGROUND.
	ELEC / ELEC	EXISTING TO BE REMOVED
	ELEC / ELEC	NEW LOCATION.
WATER	WATER / WATER	EXISTING UNDERGROUND.
	WATER / WATER	EXISTING TO BE REMOVED
	WATER / WATER	NEW 19mm WATER LINE.
SANITARY	SAN / SAN	EXISTING UNDERGROUND.
	SAN / SAN	EXISTING TO BE REMOVED
	SAN / SAN	NEW 150mm SANITATY LINE.
STORM	STORM / STORM	EXISTING UNDERGROUND.
	STORM / STORM	EXISTING TO BE REMOVED
	STORM / STORM	NEW STORM LINE.
CTV	CTV / CTV	EXISTING UNDERGROUND.
	CTV / CTV	EXISTING TO BE REMOVED
	CTV / CTV	NEW LOCATION.
PHONE	PHONE / PHONE	EXISTING UNDERGROUND.
	PHONE / PHONE	EXISTING TO BE REMOVED
		NEW LOCATION.

LEGEND	
0.00	PROPOSED GRADES
1085.55	EXISTING GRADES
	FOUND IRON POST
MH	MANHOLE
	UTILITY POLE
	LIGHT STANDARD
	SIGN

SITE INFORMATION

CIVIC ADDRESS : 2400 5th AVENUE NW
CALGARY, AB

LEGAL DESCRIPTION : LOTS 15 to 20
BLOCK 40
PLAN 29340

COMMUNITY : MOUNT PLEASANT

LAND USE : M-C2

BYLAW SETBACKS : SHARED WITH STREET = CONTEXTUAL LESS 1.5M OR 3.0 METERS
ADJACENT SETBACKS = 1.48m
SHARED WITH LANE = 1.2 METERS

LOT INFORMATION : TAKEN FROM - ARC SURVEYS LTD. 403-277-1272
DATED : 10 OCT. 2018 FILE No. : 182623

LOT COVERAGE : AREA OF LOT _____ 1394.04m²
FOOTPRINT OF BUIDLING _____ 874.96m²
GROSS FLOOR AREA _____ 3485.82m²
FLOOR AREA RATIO _____ 2.50

AREA DENSITY : THERE IS NO MAXIMUM AREA DENSITY FOR PARCELS IN M-C2 DISTRICTS.

WASTE INFO : 30 DWELLING UNITS EXPECTED TO PRODUCE 6.9m³ OF WASTE MATERIAL PER WEEK.
AUTOMATED CARTS = 0.24m³ x 4 = 0.96m³
4 YARD BIN = 3.06m³ x 2 = 6.12m³
6 YARD BIN = 4.58m³
TOTAL = 11.66m³

FLOOR AREA : MAIN FLOOR = 513.47m²
2nd FLOOR = 833.39m²
3rd FLOOR = 833.39m²
4th FLOOR = 833.39m²
5th FLOOR = 472.18m²
TOTAL = 3485.82m²

VEHICLE PARKING : PARKING STALLS REQUIRED :
AREA 3 = 0.9 x 30 DWELLING UNITS = 27 STALLS
VISITOR PARKING STALLS REQUIRED = 5 STALLS
PARKING PROVIDED = 17 STALLS

BIKE PARKING : CLASS 1 = 0.5 x 30 DWLGS = 15 (32 PROVIDED INDOORS)
CLASS 2 = 0.1 x 30 DWLGS = 3 (5 PROVIDED OUTDOORS)

WINDOW & DOOR LOCATIONS
5th FLOOR OPENINGS
2nd - 4th FLOOR OPENINGS
GROUND FLOOR OPENINGS
BASEMENT OPENINGS

FLOOR AREAS
DENOTES ONE STOREY
DENOTES 4 STOREYS
DENOTES 5 STOREYS

baboushkin design group
tel : (403) 283-4319 fax : (403) 283-3603
1310A gladstone road nw calgary alberta t2n 3g3

no.	revisions	date
.	.	.
	issued for development permit	21/02/17
	issued for building permit	.

consultants

notes :
1. THIS DRAWING MUST NOT BE SCALED
2. CONTRACTORS SHALL VERIFY ALL DIMENSIONS PRIOR TO COMMENCING WORK. ANY ERRORS OR OMISSIONS MUST BE REPORTED TO DESIGNER IMMEDIATELY.
3. THIS DRAWING IS THE EXCLUSIVE PROPERTY OF THE DESIGNERS AND MAY NOT BE REPRODUCED WITHOUT THEIR WRITTEN PERMISSION. ALL WORK IS COPYRIGHTED TO 1696508 ALBERTA LTD.

client approval :

project :
PROPOSED MULTI-RESIDENTIAL DEVELOPMENT
2400 5th STREET NW
CALGARY, AB
Lots 15 - 20, Block 40, Plan 29340

drawing title :
SITE PLAN

date :	drawn by :	drawing no. :
FEB. 17, 2021	Dan Boudreau	A0
scale : AS NOTED	job file no.: -	rev. no.: .

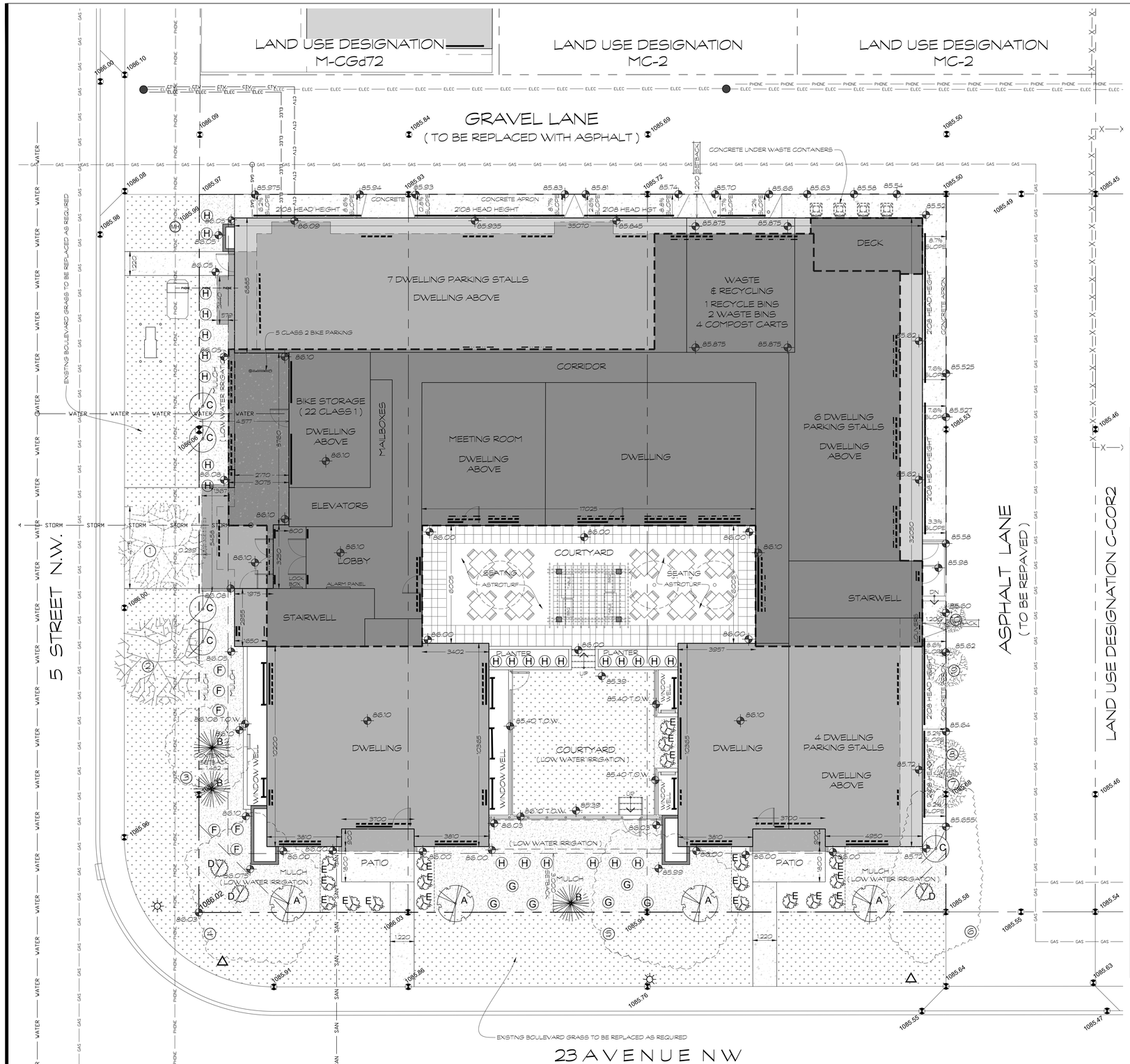

1 / A1 LANDSCAPE PLAN
1 : 100

PROPOSED PLANT SCHEDULE

A	AMUR MAPLE (4) ACER GINNALA 60mm CALIPER AT TIME OF PLANTING	D	BUFFALO JUNIPER (3) JUNIPERUS SABINA ' BUFFALO ' 5 GAL. AT TIME OF PLANTING
B	BLUE SPRUCE (3) PICEA PUNGENS 1.8m HIGH AT TIME OF PLANTING	E	ALPINE CURRANT (19) RIBES ALPINUM 2 GAL. AT TIME OF PLANTING
C	PRAIRIE SKY RISE TREMBLING ASPEN (5) POPULOUS TREMULOIDES 50mm CALIPER AT TIME OF PLANTING	F	DAY LILY (6) HEMEROCALLIS LILIOASPHODELUS
		G	BLUE FESCUE (6) FESTUCA GLAUCA
	CONCRETE	H	KARL FOERSTER GRASS (25) CALAMAGROSTIS ACUTIFLORA ' KARL FOERSTER
	457 x 457 CONCRETE PAVERS		LANDSCAPING REQUIRED : LOT = 1394.04 LESS 10% (BYLAW 553) = 1254.64 x 40% = 501.85
	305 x 305 CONCRETE PAVERS		LANDSCAPING PROVIDED : HARDSCAPE : 118.7m² SOFTSCAPE : 288.3m² TOTAL : 407.0m²
	MULCH - LOW WATER IRRIGATION		PERCENTAGE OF LANDSCAPING : 408.4m² / 1254.64m² = 32.55 %
	GRASS - LOW WATER IRRIGATION		

EXISTING PLANT SCHEDULE - ON EXISTING PUBLIC LANDS

1	EXISTING WEEPING BIRCH ' BETULA PENDULA - TO BE REMOVED CALIPER = 0.15 CANOPY = 4.5 HEIGHT = 4.0	6	EXISTING HEDGE - TO BE REMOVED CALIPER = N/A CANOPY = 2.5 HEIGHT = 2.5
2	EXISTING CRABAPPLE ' MALUS - TO REMAIN CALIPER = 0.15 CANOPY = 4.5 HEIGHT = 2.5	7	EXISTING DECIDOUS - TO BE REMOVED CALIPER = 0.10 CANOPY = 2.0 HEIGHT = 4.5
3	EXISTING BUSH - TO BE REMOVED CALIPER = N/A CANOPY = 4.5 HEIGHT = 4.0	8	EXISTING DECIDOUS - TO BE REMOVED CALIPER = 0.10 CANOPY = 2.0 HEIGHT = 4.5
4	EXISTING BUSH - TO BE REMOVED CALIPER = N/A CANOPY = 8.0 HEIGHT = 5.0	9	EXISTING DECIDOUS - TO BE REMOVED CALIPER = 0.10 CANOPY = 2.0 HEIGHT = 4.5
5	EXISTING HEDGE - TO BE REMOVED CALIPER = N/A CANOPY = 7.5 HEIGHT = 3.0	10	EXISTING DECIDOUS - TO BE REMOVED CALIPER = 0.15 CANOPY = 1.5 HEIGHT = 4.5

NOTE : ALL EXISTING TREES & SHRUBS ON EXISTING PROPERTIES TO BE REMOVED.

baboushkin design group
tel : (403) 283-4319 fax : (403) 283-3603
1310A gladstone road nw calgary alberta t2n 3g3

no.	revisions	date
.	.	.
	issued for development permit	21/02/17
	issued for building permit	.

consultants

notes :
1. THIS DRAWING MUST NOT BE SCALED
2. CONTRACTORS SHALL VERIFY ALL DIMENSIONS PRIOR TO COMMENCING WORK. ANY ERRORS OR OMISSIONS MUST BE REPORTED TO DESIGNER IMMEDIATELY.
3. THIS DRAWING IS THE EXCLUSIVE PROPERTY OF THE DESIGNERS AND MAY NOT BE REPRODUCED WITHOUT THEIR WRITTEN PERMISSION. ALL WORK IS COPYRIGHTED TO 1696508 ALBERTA LTD.

client approval :

project :
PROPOSED MULTI-RESIDENTIAL DEVELOPMENT

2400 5th STREET NW
CALGARY, AB

Lots 15 - 20, Block 40, Plan 29340

drawing title :
LANDSCAPE PLAN

date :	drawn by :	drawing no. :
FEB. 17, 2021	Dan Boudreau	A1
scale : AS NOTED	job file no. : -	rev. no. : .

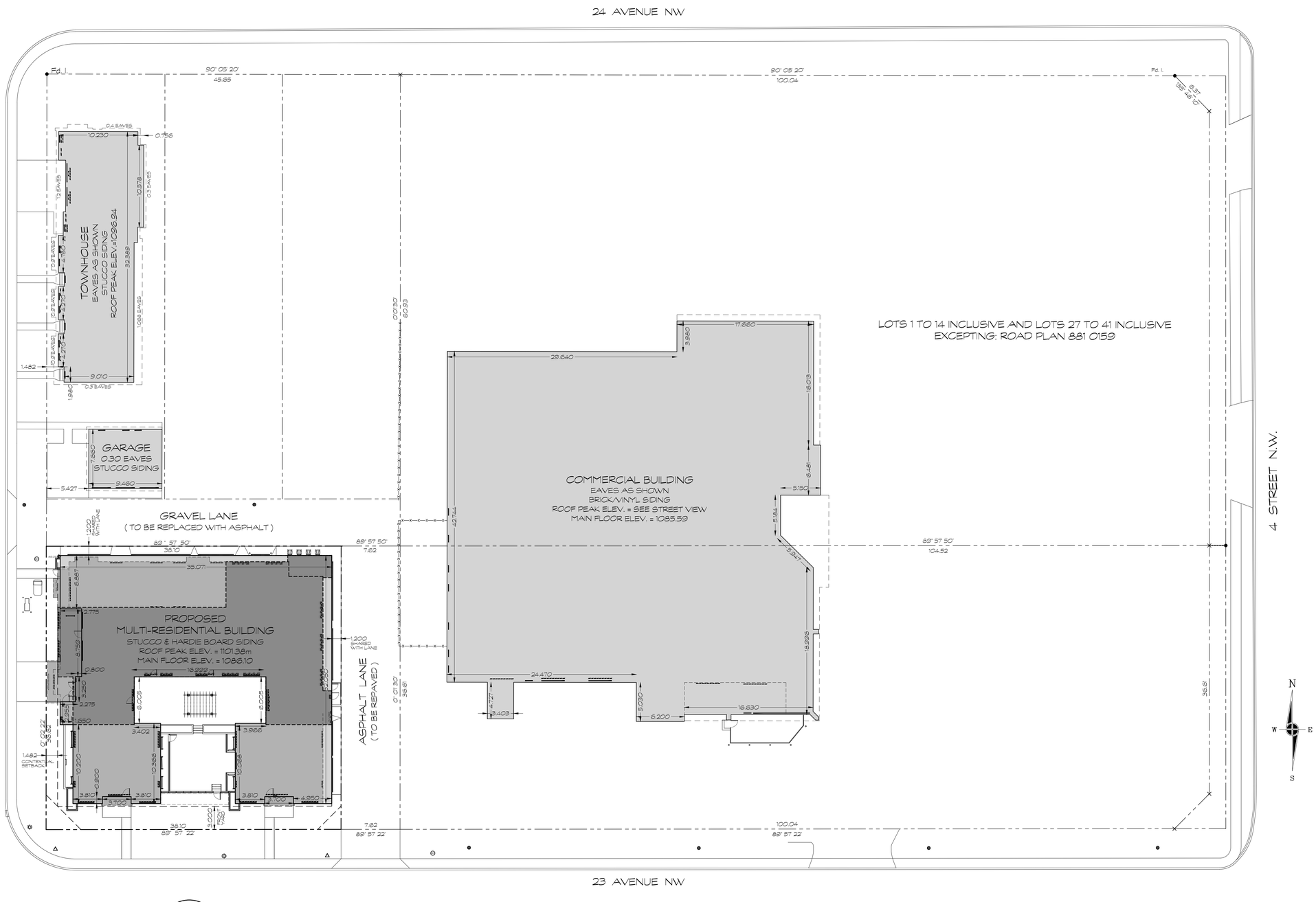

1 / A2 BLOCK PLAN

1 : 250

baboushkin design group

tel : (403) 283-4319 fax : (403) 283-3603

1310A gladstone road nw calgary alberta t2n 3g3

no.	revisions	date
.	.	.
	issued for development permit	21/02/17
	issued for building permit	.

consultants

notes :

1. THIS DRAWING MUST NOT BE SCALED
2. CONTRACTORS SHALL VERIFY ALL DIMENSIONS PRIOR TO COMMENCING WORK. ANY ERRORS OR OMISSIONS MUST BE REPORTED TO DESIGNER IMMEDIATELY.
3. THIS DRAWING IS THE EXCLUSIVE PROPERTY OF THE DESIGNERS AND MAY NOT BE REPRODUCED WITHOUT THEIR WRITTEN PERMISSION. ALL WORK IS COPYRIGHTED TO 1696508 ALBERTA LTD.

client approval :

project : PROPOSED MULTI-RESIDENTIAL DEVELOPMENT

2400 5th STREET NW
CALGARY, AB

Lots 15 - 20, Block 40, Plan 29340

drawing title : BLOCK PLAN

date :	drawn by :	drawing no. :
FEB. 17, 2021	Dan Boudreau	A2
scale : AS NOTED	job file no. : -	rev. no. : .

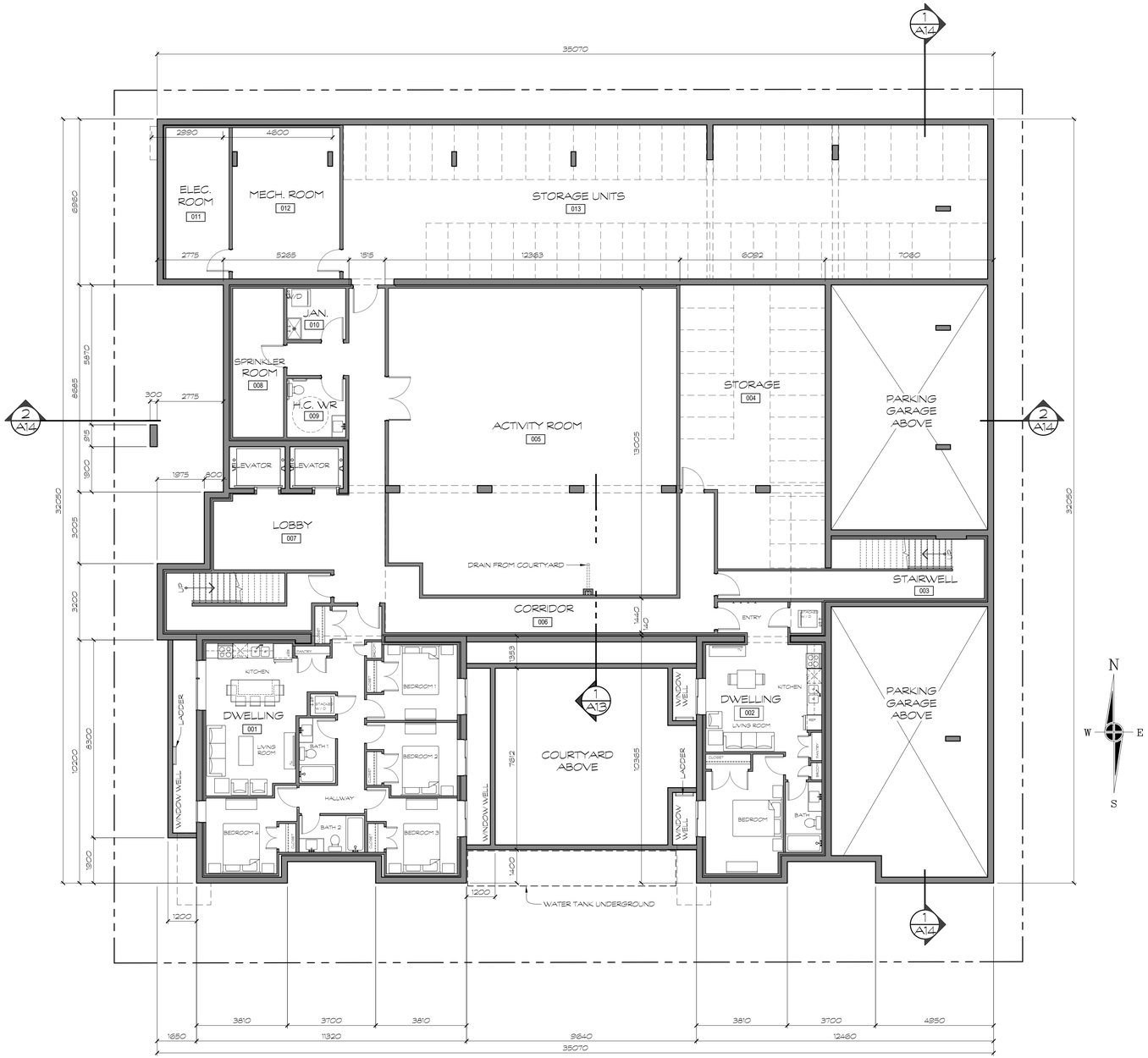

1 A3 LOWER FLOOR PLAN
1 : 100

baboushkin design group
tel : (403) 283-4319 fax : (403) 283-3603
1310A gladstone road nw calgary alberta t2n 3g3

no.	revisions	date
.	.	.
	issued for development permit	21/02/17
	issued for building permit	.

consultants

notes :
1. THIS DRAWING MUST NOT BE SCALED
2. CONTRACTORS SHALL VERIFY ALL DIMENSIONS PRIOR TO COMMENCING WORK. ANY ERRORS OR OMISSIONS MUST BE REPORTED TO DESIGNER IMMEDIATELY.
3. THIS DRAWING IS THE EXCLUSIVE PROPERTY OF THE DESIGNERS AND MAY NOT BE REPRODUCED WITHOUT THEIR WRITTEN PERMISSION. ALL WORK IS COPYRIGHTED TO 1696508 ALBERTA LTD.

client approval :

project :
PROPOSED MULTI-RESIDENTIAL DEVELOPMENT
2400 5th STREET NW
CALGARY, AB
Lots 15 - 20, Block 40, Plan 29340

drawing title :
LOWER FLOOR PLAN

date :	drawn by :	drawing no. :
FEB. 17, 2021	Dan Boudreau	A3
scale : AS NOTED	job file no.: -	rev. no.: .

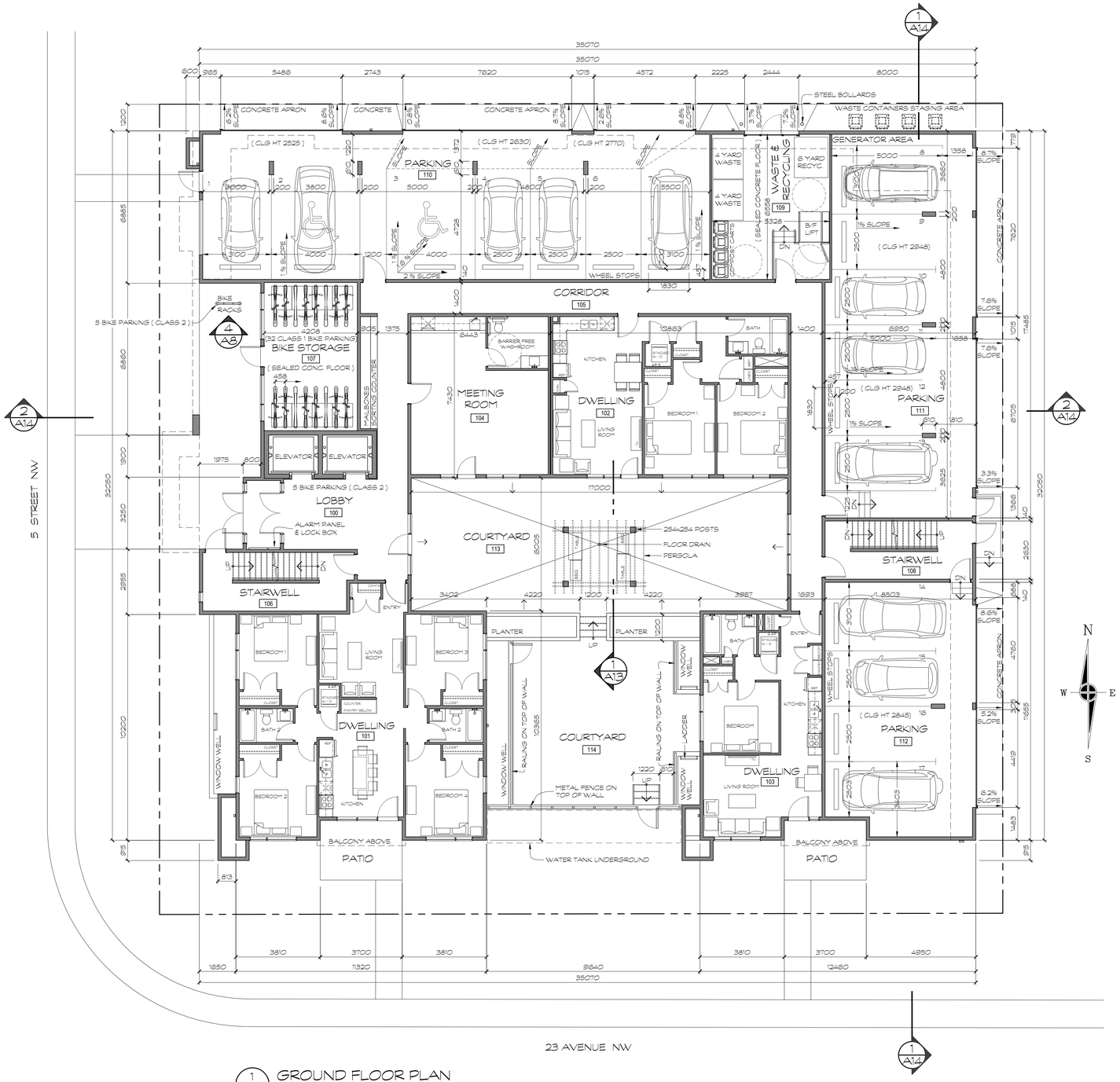

1 A4 GROUND FLOOR PLAN
1 : 100 513.47m²

baboushkin design group
tel : (403) 283-4319 fax : (403) 283-3603
1310A gladstone road nw calgary alberta t2n 3g3

no.	revisions	date
.	.	.
	issued for development permit	21/02/17
	issued for building permit	.

consultants

notes :
1. THIS DRAWING MUST NOT BE SCALED
2. CONTRACTORS SHALL VERIFY ALL DIMENSIONS PRIOR TO COMMENCING WORK. ANY ERRORS OR OMISSIONS MUST BE REPORTED TO DESIGNER IMMEDIATELY.
3. THIS DRAWING IS THE EXCLUSIVE PROPERTY OF THE DESIGNERS AND MAY NOT BE REPRODUCED WITHOUT THEIR WRITTEN PERMISSION. ALL WORK IS COPYRIGHTED TO 1696508 ALBERTA LTD.

client approval :

project : PROPOSED MULTI-RESIDENTIAL DEVELOPMENT

2400 5th STREET NW
CALGARY, AB

Lots 15 - 20, Block 40, Plan 29340

drawing title : MAIN FLOOR PLAN

date :	drawn by :	drawing no. :
FEB. 17, 2021	Dan Boudreau	A4
scale : AS NOTED	job file no. : -	rev. no. : .

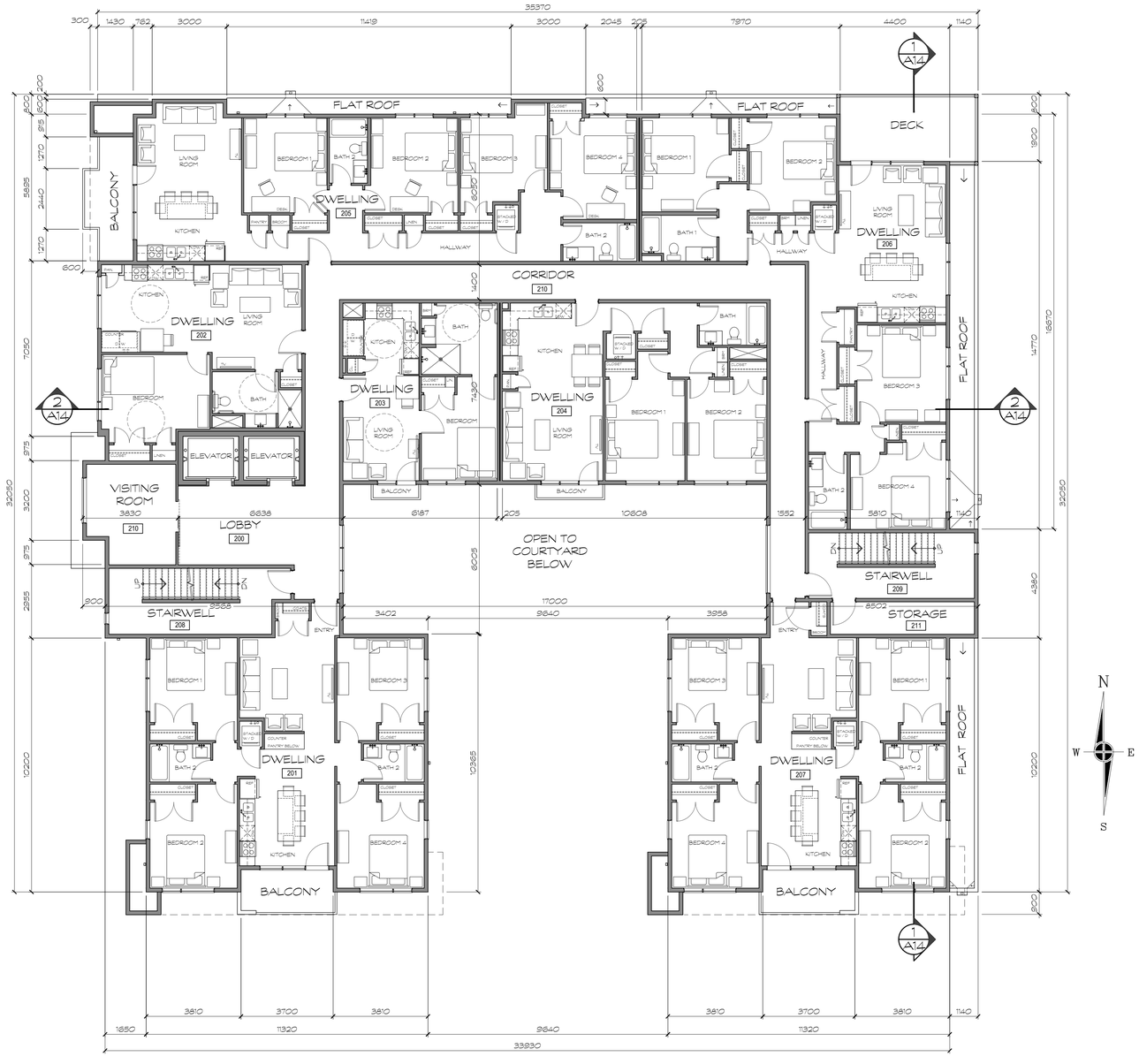

1 A5 2nd & 3rd FLOOR PLAN

1 : 100 833.33m²

baboushkin design group

tel : (403) 283-4319 fax : (403) 283-3603

1310A gladstone road nw calgary alberta t2n 3g3

no.	revisions	date
.	.	.
	issued for development permit	21/02/17
	issued for building permit	.

consultants

notes :

1. THIS DRAWING MUST NOT BE SCALED
2. CONTRACTORS SHALL VERIFY ALL DIMENSIONS PRIOR TO COMMENCING WORK. ANY ERRORS OR OMISSIONS MUST BE REPORTED TO DESIGNER IMMEDIATELY.
3. THIS DRAWING IS THE EXCLUSIVE PROPERTY OF THE DESIGNERS AND MAY NOT BE REPRODUCED WITHOUT THEIR WRITTEN PERMISSION. ALL WORK IS COPYRIGHTED TO 1696508 ALBERTA LTD.

client approval :

project :

PROPOSED MULTI-RESIDENTIAL DEVELOPMENT

2400 5th STREET NW
CALGARY, AB

Lots 15 - 20, Block 40, Plan 29340

drawing title :

2dn & 3rd FLOOR PLAN

date :	drawn by :	drawing no. :
FEB. 17, 2021	Dan Boudreau	A5
scale : AS NOTED	job file no.: -	rev. no.: .

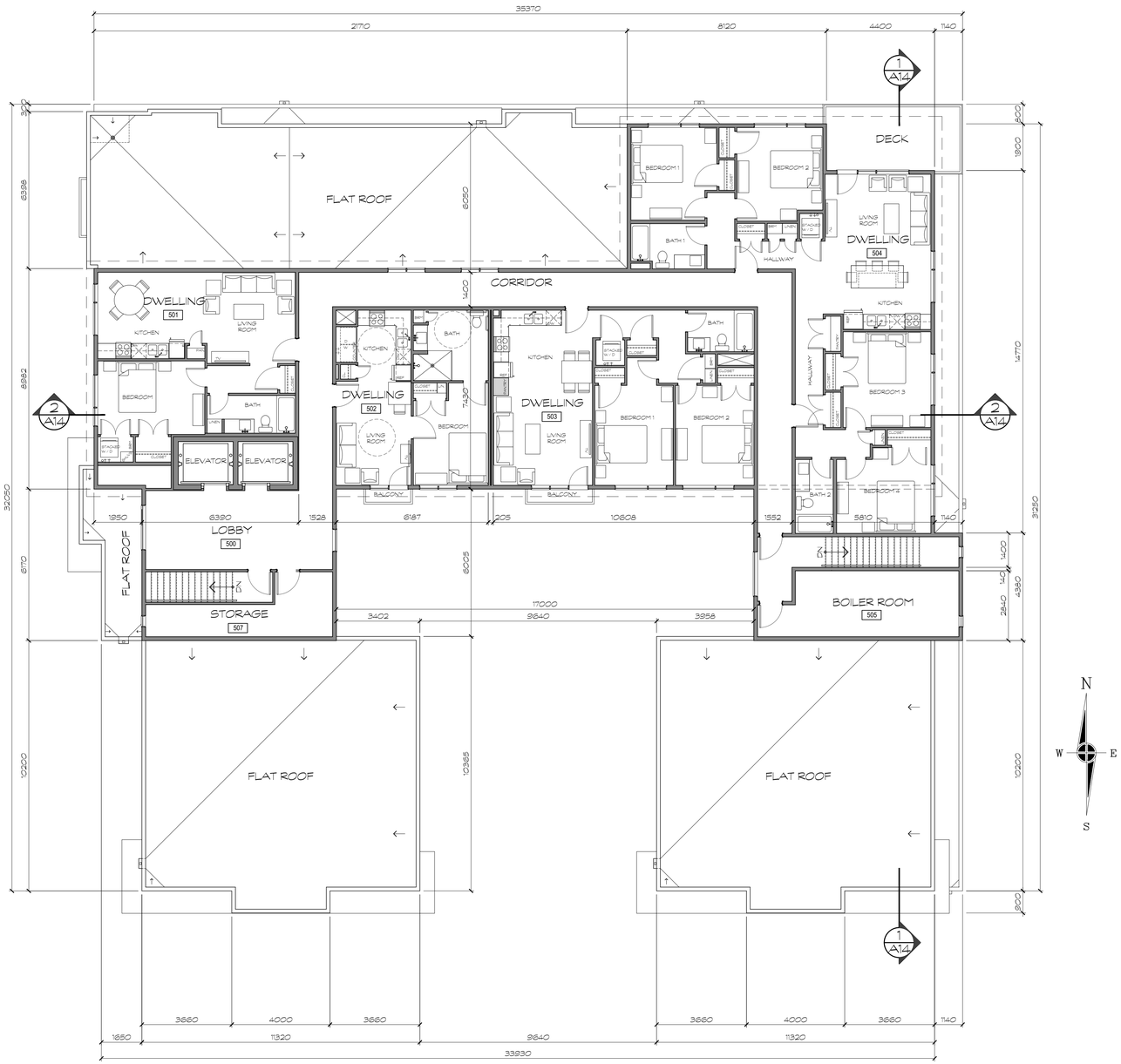

1 A7 5th FLOOR PLAN

1 : 100 472.18m²

baboushkin design group

tel : (403) 283-4319 fax : (403) 283-3603

1310A gladstone road nw calgary alberta t2n 3g3

no.	revisions	date
.	.	.
	issued for development permit	21/02/17
	issued for building permit	.

consultants

notes :

1. THIS DRAWING MUST NOT BE SCALED
2. CONTRACTORS SHALL VERIFY ALL DIMENSIONS PRIOR TO COMMENCING WORK. ANY ERRORS OR OMISSIONS MUST BE REPORTED TO DESIGNER IMMEDIATELY.
3. THIS DRAWING IS THE EXCLUSIVE PROPERTY OF THE DESIGNERS AND MAY NOT BE REPRODUCED WITHOUT THEIR WRITTEN PERMISSION. ALL WORK IS COPYRIGHTED TO 1696508 ALBERTA LTD.

client approval :

project : PROPOSED MULTI-RESIDENTIAL DEVELOPMENT

2400 5th STREET NW
CALGARY, AB

Lots 15 - 20, Block 40, Plan 29340

drawing title :

5th FLOOR PLAN

date :	drawn by :	drawing no. :
FEB. 17, 2021	Dan Boudreau	A7
scale : AS NOTED	job file no.: -	rev. no.: .

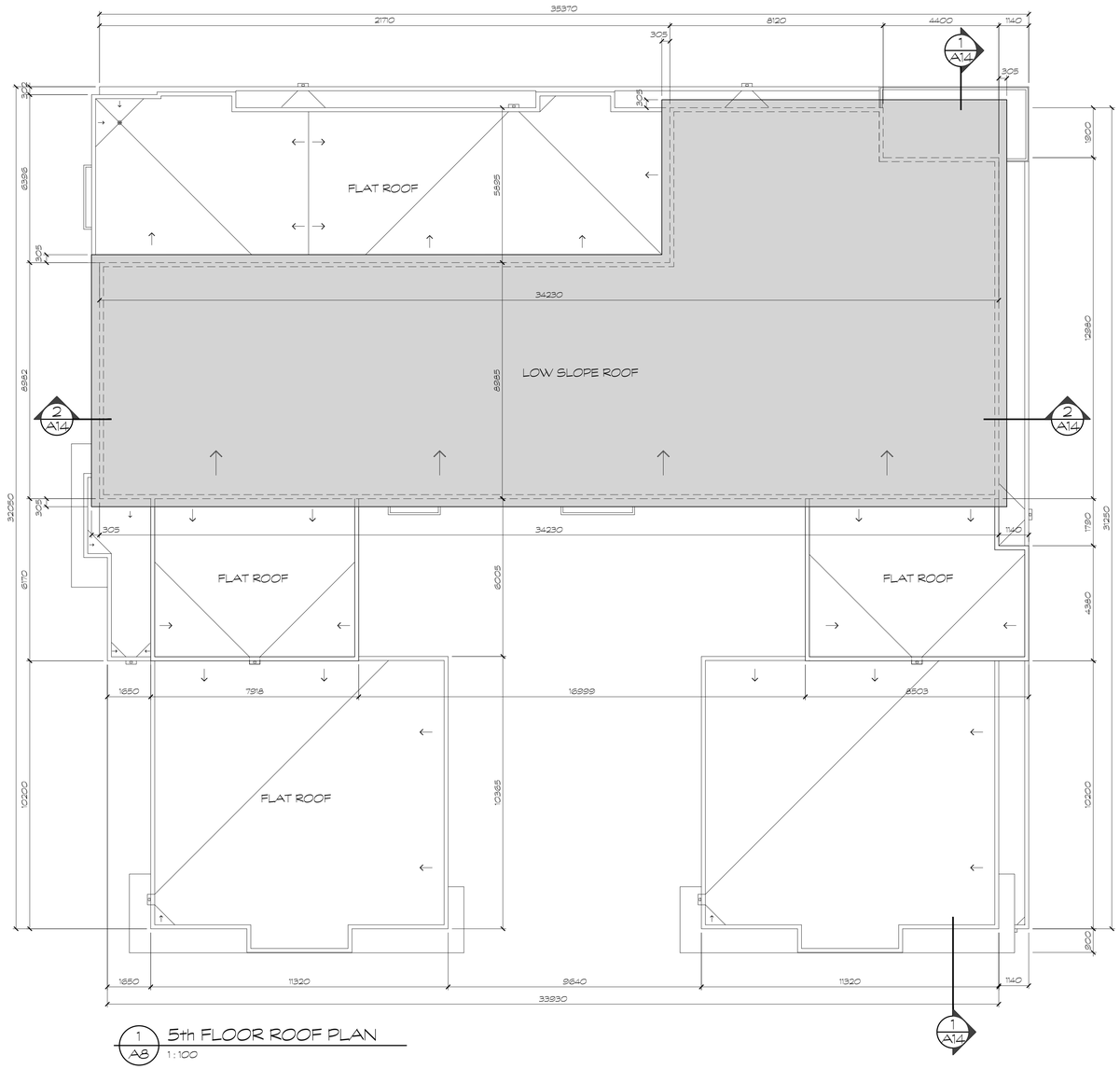

1 A8 5th FLOOR ROOF PLAN
1 : 100

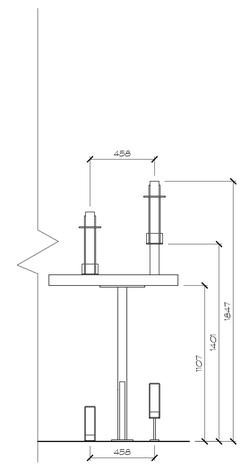

2 A8 INTERIOR BIKE RACK FRONT ELEVATION
1 : 20 4 BIKE CAPACITY EACH

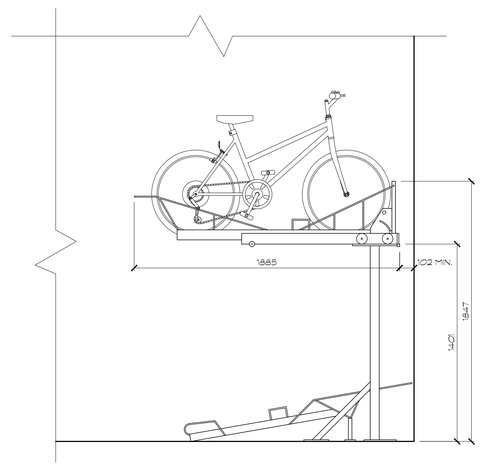

3 A8 INTERIOR BIKE RACK SIDE ELEVATION
1 : 20 4 BIKE CAPACITY EACH

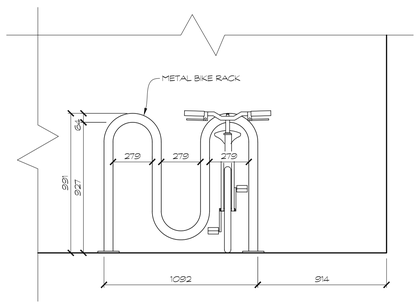

4 A8 EXTERIOR BIKE RACK FRONT ELEV.
1 : 20 5 BIKE CAPACITY

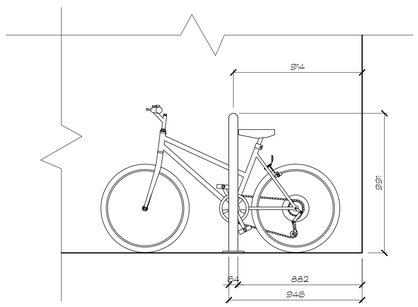

5 A8 EXTERIOR BIKE RACK SIDE ELEV.
1 : 20 5 BIKE CAPACITY

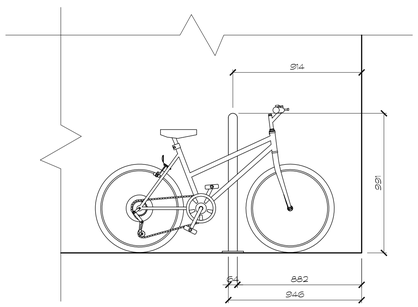

6 A8 EXTERIOR BIKE RACK SIDE ELEV.
1 : 20 5 BIKE CAPACITY

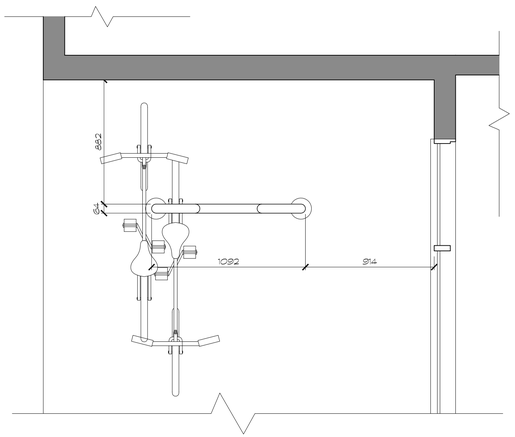

7 A8 EXTRIOR BIKE RACK PLAN - 5 BIKE
1 : 20

baboushkin design group
tel : (403) 283-4319 fax : (403) 283-3603
1310A gladstone road nw calgary alberta t2n 3g3

no.	revisions	date
.	.	.
	issued for development permit	21/02/17
	issued for building permit	.

consultants

notes :
1. THIS DRAWING MUST NOT BE SCALED
2. CONTRACTORS SHALL VERIFY ALL DIMENSIONS PRIOR TO COMMENCING WORK ANY ERRORS OR OMISSIONS MUST BE REPORTED TO DESIGNER IMMEDIATELY.
3. THIS DRAWING IS THE EXCLUSIVE PROPERTY OF THE DESIGNERS AND MAY NOT BE REPRODUCED WITHOUT THEIR WRITTEN PERMISSION. ALL WORK IS COPYRIGHTED TO 1696508 ALBERTA LTD.

client approval :

project : PROPOSED MULTI-RESIDENTIAL DEVELOPMENT

2400 5th STREET NW
CALGARY, AB

Lots 15 - 20, Block 40, Plan 29340

drawing title :
5th FLOOR ROOF PLAN
BIKE RACK DETAILS

date :	drawn by :	drawing no. :
FEB. 17, 2021	Dan Boudreau	A8
scale : AS NOTED	job file no.: -	rev. no.: .

1 A9 WEST ELEVATION
1 : 100

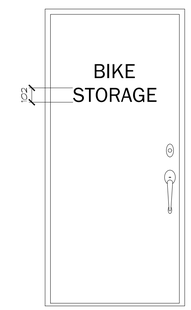

3 A9 BIKE ROOM DOOR SIGNAGE
1 : 20

2 A9 SOUTH ELEVATION
1 : 100

baboushkin design group
tel : (403) 283-4319 fax : (403) 283-3603
1310A gladstone road nw calgary alberta t2n 3g3

no.	revisions	date
.	.	.
	issued for development permit	21/02/17
	issued for building permit	.

consultants

notes :
1. THIS DRAWING MUST NOT BE SCALED
2. CONTRACTORS SHALL VERIFY ALL DIMENSIONS PRIOR TO COMMENCING WORK. ANY ERRORS OR OMISSIONS MUST BE REPORTED TO DESIGNER IMMEDIATELY.
3. THIS DRAWING IS THE EXCLUSIVE PROPERTY OF THE DESIGNERS AND MAY NOT BE REPRODUCED WITHOUT THEIR WRITTEN PERMISSION. ALL WORK IS COPYRIGHTED TO 1696508 ALBERTA LTD.

client approval :

project :
PROPOSED MULTI-RESIDENTIAL DEVELOPMENT
2400 5th STREET NW
CALGARY, AB
Lots 15 - 20, Block 40, Plan 29340

drawing title :
WEST ELEVATION
SOUTH ELEVATION

date :	drawn by :	drawing no. :
FEB. 17, 2021	Dan Boudreau	A9
scale : AS NOTED	job file no.: -	rev. no.: .

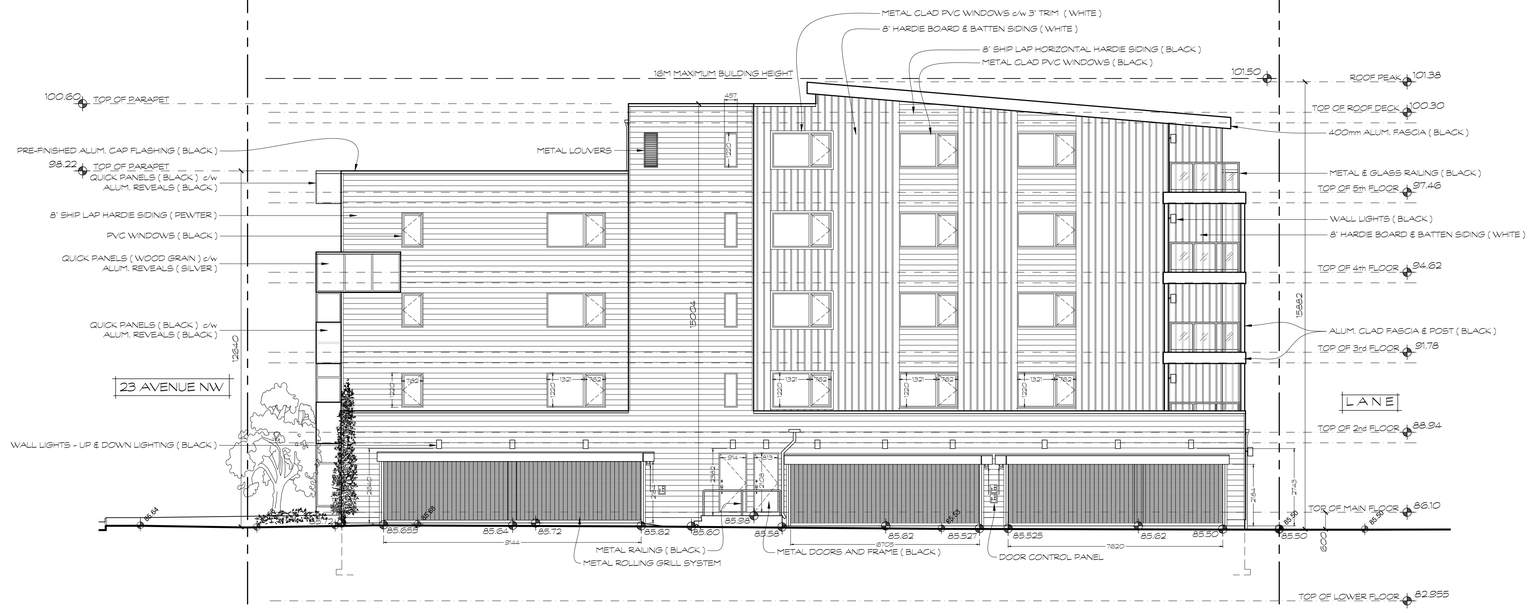

1 A10 EAST ELEVATION
1 : 100

2 A10 NORTH ELEVATION
1 : 100

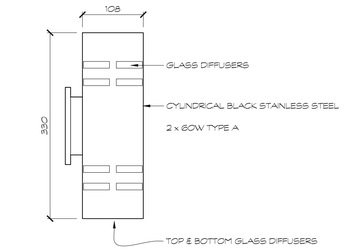

3 A10 BALCONY AND WALL LIGHTS
1 : 5

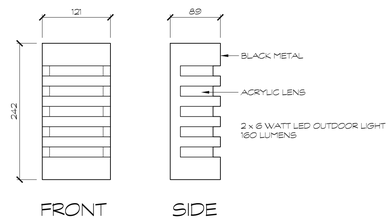

4 A10 LIGHTS ABOVE GARAGE DOOR
1 : 5

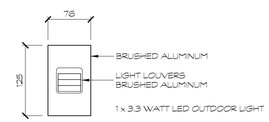

5 A10 ACCENT LIGHTING
1 : 5

baboushkin design group
tel : (403) 283-4319 fax : (403) 283-3603
1310A gladstone road nw calgary alberta t2n 3g3

no.	revisions	date
.	.	.
	issued for development permit	21/02/17
	issued for building permit	.

consultants

notes :
1. THIS DRAWING MUST NOT BE SCALED
2. CONTRACTORS SHALL VERIFY ALL DIMENSIONS PRIOR TO COMMENCING WORK. ANY ERRORS OR OMISSIONS MUST BE REPORTED TO DESIGNER IMMEDIATELY.
3. THIS DRAWING IS THE EXCLUSIVE PROPERTY OF THE DESIGNERS AND MAY NOT BE REPRODUCED WITHOUT THEIR WRITTEN PERMISSION. ALL WORK IS COPYRIGHTED TO 1696508 ALBERTA LTD.

client approval :

project :
PROPOSED MULTI-RESIDENTIAL DEVELOPMENT
2400 5th STREET NW
CALGARY, AB
Lots 15 - 20, Block 40, Plan 29340

drawing title :
EAST ELEVATION
NORTH ELEVATION
LIGHTING DETAILS

date :	drawn by :	drawing no. :
FEB. 17, 2021	Dan Boudreau	A10
scale : AS NOTED	job file no.: -	rev. no.: .

1 A12 WEST FACING COURTYARD ELEVATION & BOULEVARD SECTION
1 : 100

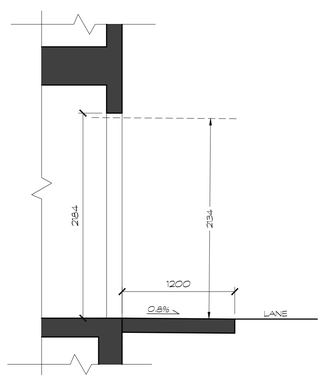

2 A12 SECTION @ 0.8% SLOPED APRON
1 : 30

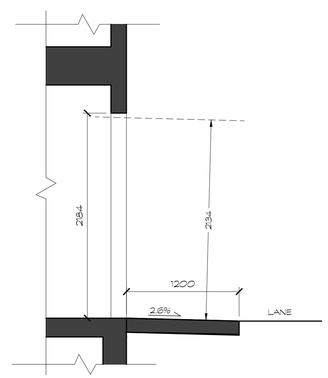

3 A12 SECTION @ 2.6% SLOPED APRON
1 : 30

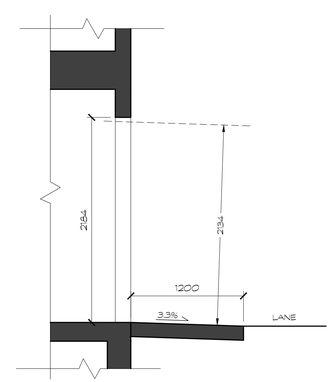

4 A12 SECTION @ 3.3% SLOPED APRON
1 : 30

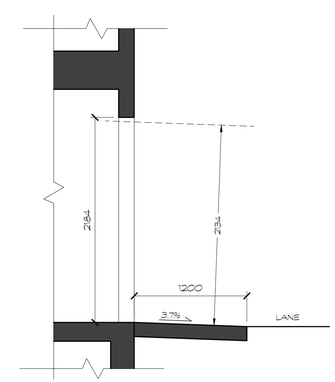

5 A12 SECTION @ 3.7% SLOPED APRON
1 : 30

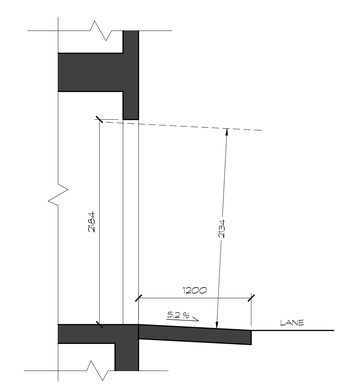

6 A12 SECTION @ 5.2 % SLOPED APRON
1 : 30

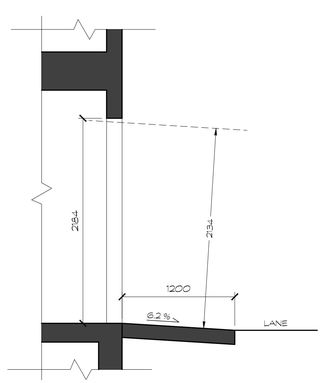

7 A12 SECTION @ 6.2% SLOPED APRON
1 : 30

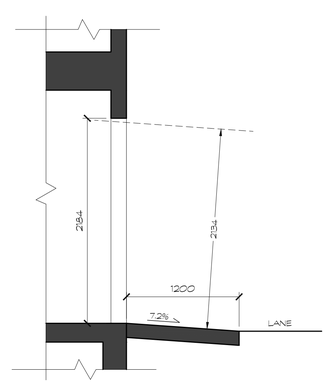

8 A12 SECTION @ 7.2% SLOPED APRON
1 : 30

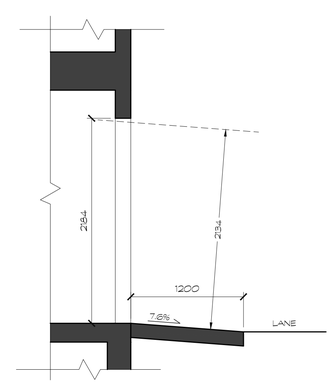

9 A12 SECTION @ 7.6% SLOPED APRON
1 : 30

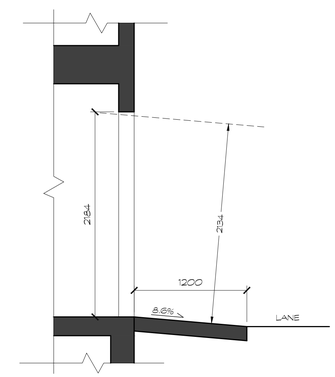

10 A12 SECTION @ 8.6% SLOPED APRON
1 : 30

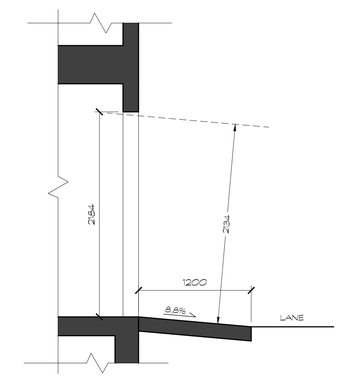

11 A12 SECTION @ 8.8% SLOPED APRON
1 : 30

baboushkin design group
tel : (403) 283-4319 fax : (403) 283-3603
1310A gladstone road nw calgary alberta t2n 3g3

no.	revisions	date
.	.	.
	issued for development permit	21/02/17
	issued for building permit	.

consultants

notes :
1. THIS DRAWING MUST NOT BE SCALED
2. CONTRACTORS SHALL VERIFY ALL DIMENSIONS PRIOR TO COMMENCING WORK. ANY ERRORS OR OMISSIONS MUST BE REPORTED TO DESIGNER IMMEDIATELY.
3. THIS DRAWING IS THE EXCLUSIVE PROPERTY OF THE DESIGNERS AND MAY NOT BE REPRODUCED WITHOUT THEIR WRITTEN PERMISSION. ALL WORK IS COPYRIGHTED TO 1696508 ALBERTA LTD.

client approval :

project : PROPOSED MULTI-RESIDENTIAL DEVELOPMENT

2400 5th STREET NW
CALGARY, AB

Lots 15 - 20, Block 40, Plan 29340

drawing title : COURTYARD ELEV. SLOPING APRON SECTIONS

date :	drawn by :	drawing no. :
FEB. 17, 2021	Dan Boudreau	A12
scale : AS NOTED	job file no.: -	rev. no.: .

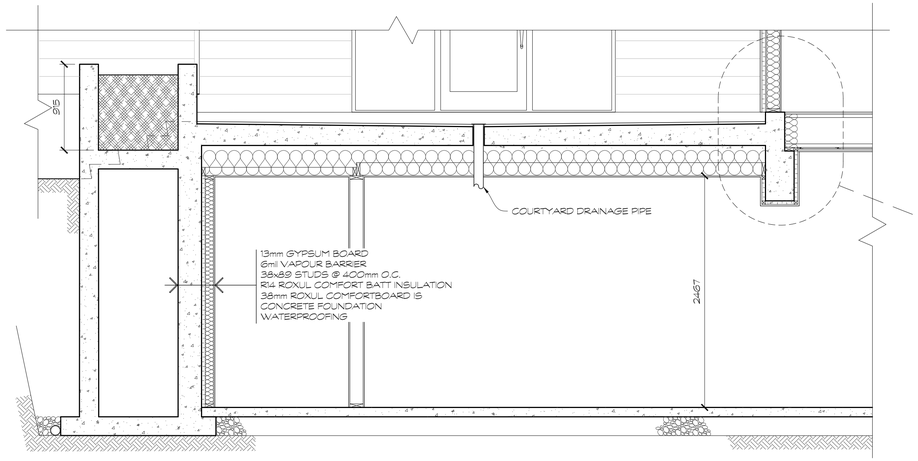

1 / A13 BUILDING SECTION THROUGH COURTYARD
1 : 30

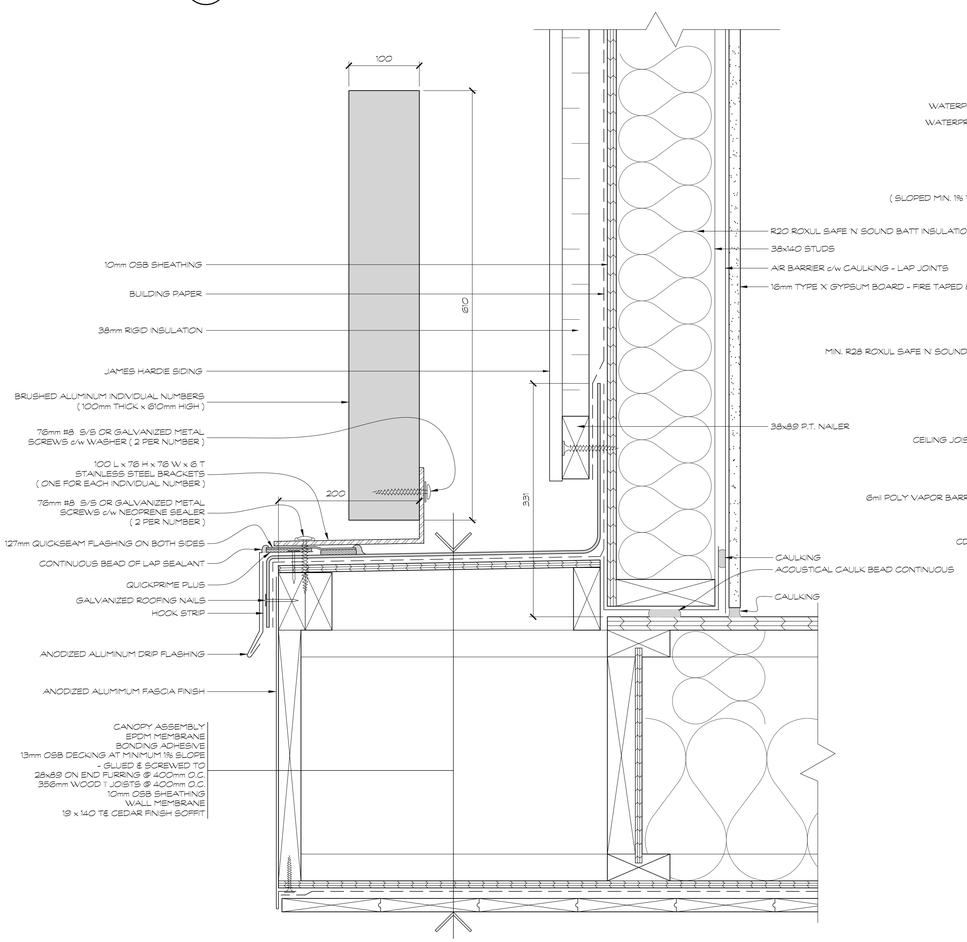

2 / A13 CANOPY / SIGNAGE DETAIL
1 : 4

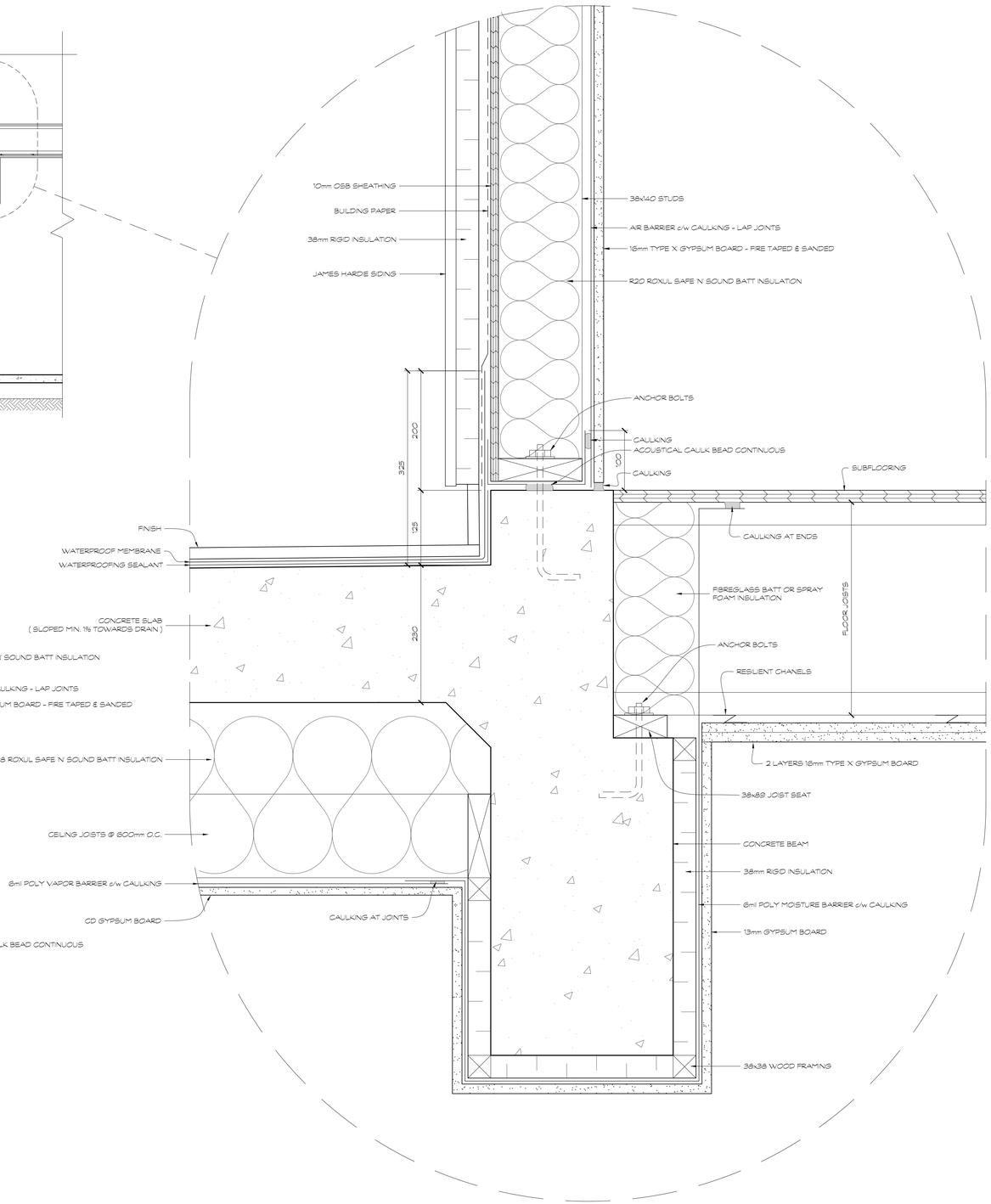

3 / A13 WALL FLASHING & COURTYARD SLAB DETAIL
1 : 4

baboushkin design group
tel : (403) 283-4319 fax : (403) 283-3603
1310A gladstone road nw calgary alberta t2n 3g3

no.	revisions	date
.	.	.
	issued for development permit	21/02/17
	issued for building permit	.

consultants

notes :
1. THIS DRAWING MUST NOT BE SCALED
2. CONTRACTORS SHALL VERIFY ALL DIMENSIONS PRIOR TO COMMENCING WORK. ANY ERRORS OR OMISSIONS MUST BE REPORTED TO DESIGNER IMMEDIATELY.
3. THIS DRAWING IS THE EXCLUSIVE PROPERTY OF THE DESIGNERS AND MAY NOT BE REPRODUCED WITHOUT THEIR WRITTEN PERMISSION. ALL WORK IS COPYRIGHTED TO 1696508 ALBERTA LTD.

client approval :

project : PROPOSED MULTI-RESIDENTIAL DEVELOPMENT

2400 5th STREET NW
CALGARY, AB

Lots 15 - 20, Block 40, Plan 29340

drawing title :
COURTYARD SLAB SECTION & DETAIL

date :	drawn by :	drawing no. :
FEB. 17, 2021	Dan Boudreau	A13
scale : AS NOTED	job file no.: -	rev. no.: .

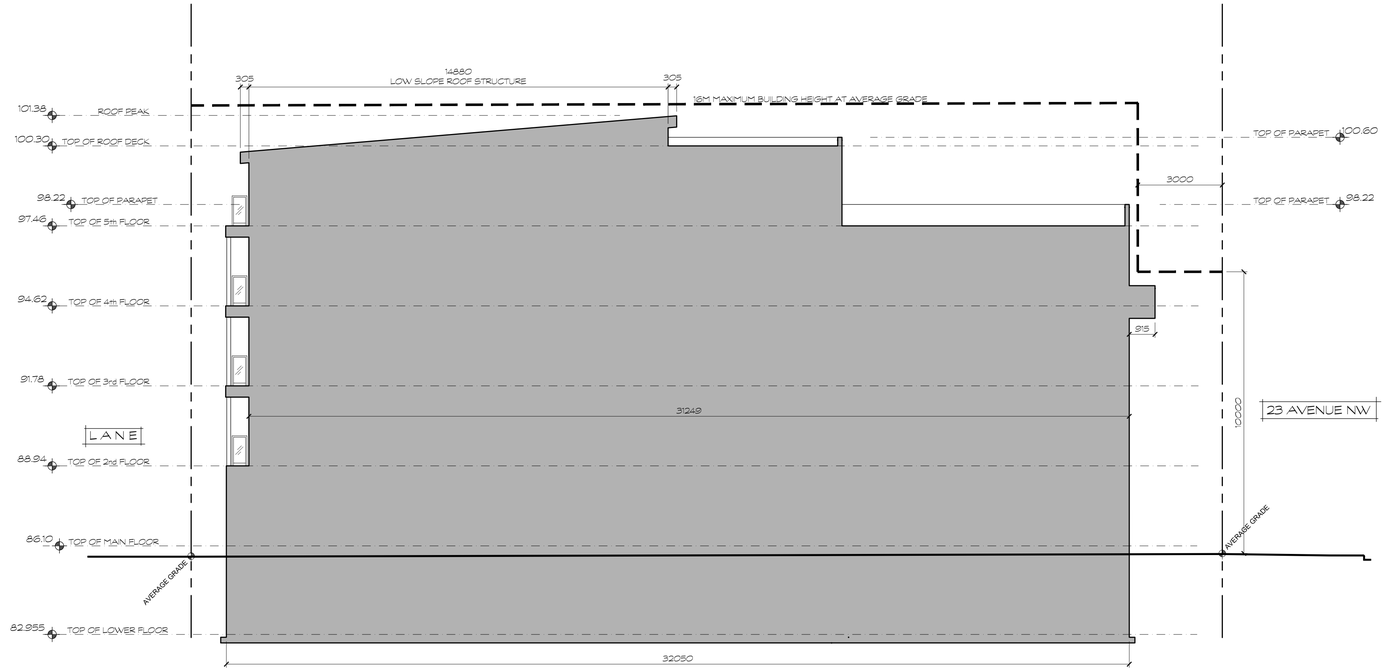

1 / A14 NORTH SOUTH BUILDING SECTION - EAST SIDE
1 : 100
AREA OF CROSS SECTION = 536.3m²

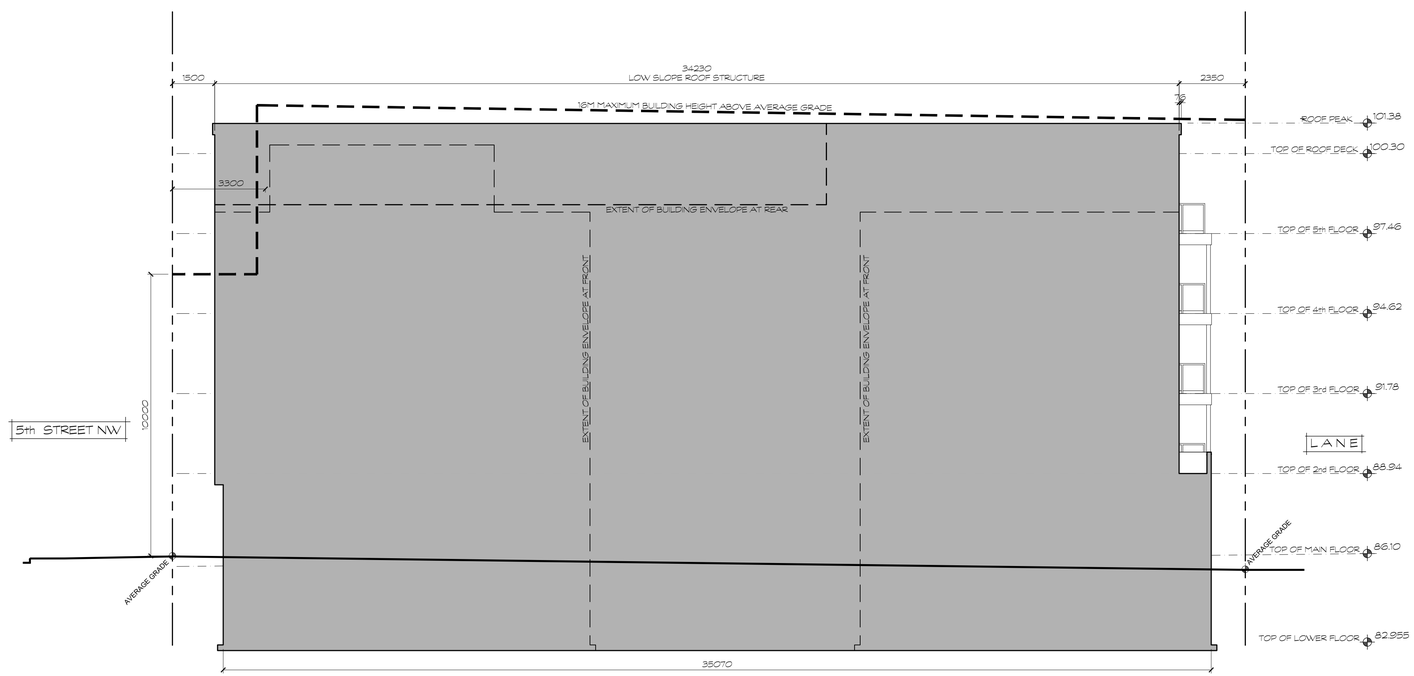

2 / A14 EAST WEST CROSS SECTION - NORTH END
1 : 100
AREA OF CROSS SECTION = 646.2m²

baboushkin design group
tel : (403) 283-4319 fax : (403) 283-3603
1310A gladstone road nw calgary alberta t2n 3g3

no.	revisions	date
.	.	.
	issued for development permit	21/02/17
	issued for building permit	.

consultants

notes :
1. THIS DRAWING MUST NOT BE SCALED
2. CONTRACTORS SHALL VERIFY ALL DIMENSIONS PRIOR TO COMMENCING WORK. ANY ERRORS OR OMISSIONS MUST BE REPORTED TO DESIGNER IMMEDIATELY.
3. THIS DRAWING IS THE EXCLUSIVE PROPERTY OF THE DESIGNERS AND MAY NOT BE REPRODUCED WITHOUT THEIR WRITTEN PERMISSION. ALL WORK IS COPYRIGHTED TO 1696508 ALBERTA LTD.

client approval :

project :
PROPOSED MULTI-RESIDENTIAL DEVELOPMENT
2400 5th STREET NW
CALGARY, AB
Lots 15 - 20, Block 40, Plan 29340

drawing title :
BUILDING CROSS SECTIONS

date :	drawn by :	drawing no. :
FEB. 17, 2021	Dan Boudreau	A14
scale : AS NOTED	job file no.: -	rev. no.: .

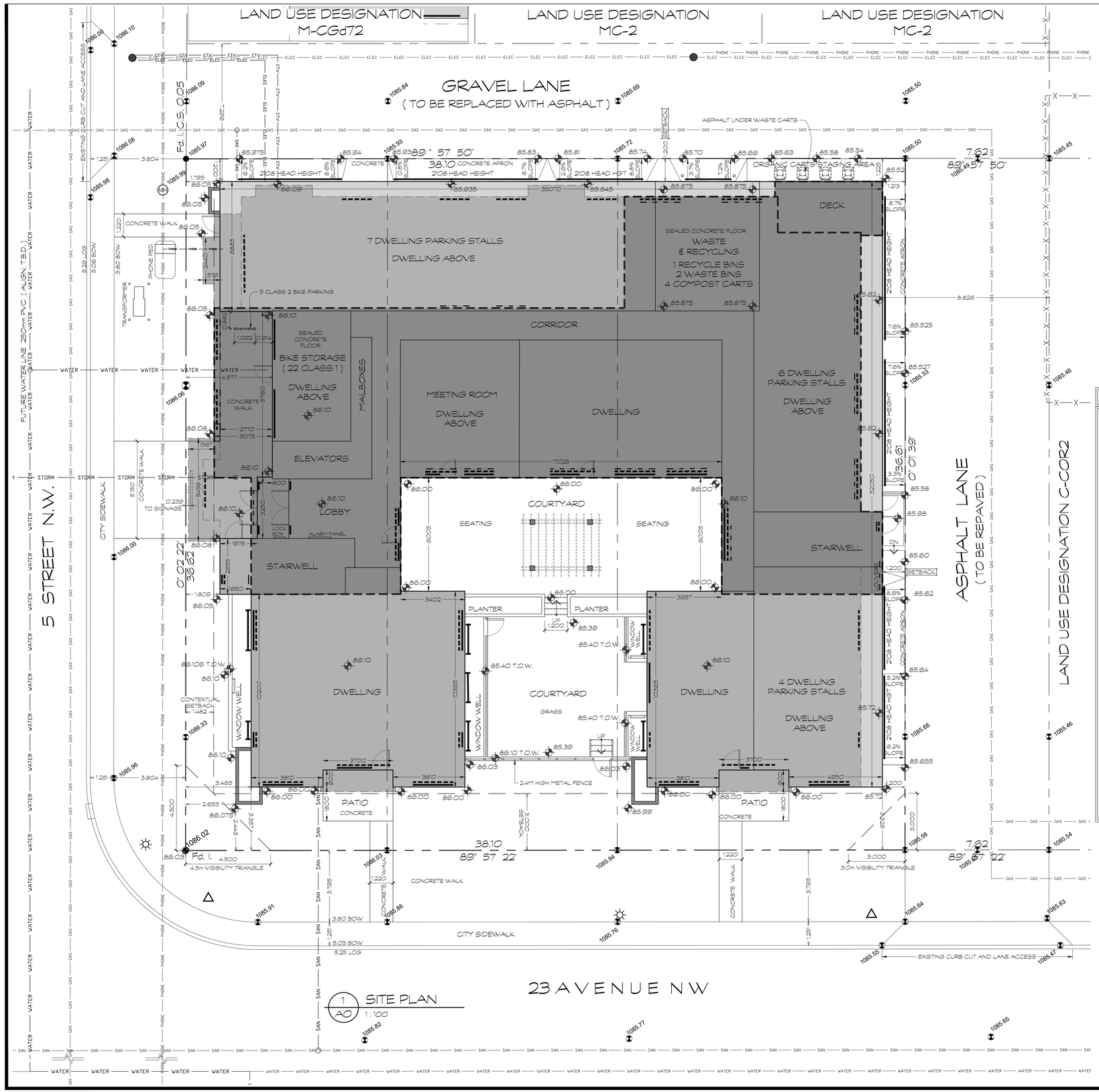

1 AO SITE PLAN
1 : 100

UTILITIES SCHEDULE		
GAS	GAS / GAS	EXISTING UNDERGROUND.
	GAS / GAS	EXISTING TO BE REMOVED
	GAS / GAS	NEW LOCATION.
ELEC	ELEC / ELEC	EXISTING UNDERGROUND.
	ELEC / ELEC	EXISTING TO BE REMOVED
	ELEC / ELEC	NEW LOCATION.
WATER	WATER / WATER	EXISTING UNDERGROUND.
	WATER / WATER	EXISTING TO BE REMOVED
	WATER / WATER	NEW 19mm WATER LINE.
SANITARY	SAN / SAN	EXISTING UNDERGROUND.
	SAN / SAN	EXISTING TO BE REMOVED
	SAN / SAN	NEW 150mm SANITATY LINE.
STORM	STORM / STORM	EXISTING UNDERGROUND.
	STORM / STORM	EXISTING TO BE REMOVED
	STORM / STORM	NEW STORM LINE.
CTV	CTV / CTV	EXISTING UNDERGROUND.
	CTV / CTV	EXISTING TO BE REMOVED
	CTV / CTV	NEW LOCATION.
PHONE	PHONE / PHONE	EXISTING UNDERGROUND.
	PHONE / PHONE	EXISTING TO BE REMOVED
		NEW LOCATION.

LEGEND	
0.00	PROPOSED GRADES
1085.55	EXISTING GRADES
	FOUND IRON POST
MH	MANHOLE
	UTILITY POLE
	LIGHT STANDARD
	SIGN

SITE INFORMATION

CIVIC ADDRESS : 2400 5th AVENUE NW
CALGARY, AB

LEGAL DESCRIPTION : LOTS 15 to 20
BLOCK 40
PLAN 29340

COMMUNITY : MOUNT PLEASANT

LAND USE : M-C2

BYLAW SETBACKS : SHARED WITH STREET = CONTEXTUAL LESS 1.5M OR 3.0 METERS
ADJACENT SETBACKS = 1.48m
SHARED WITH LANE = 1.2 METERS

LOT INFORMATION : TAKEN FROM - ARC SURVEYS LTD. 403-277-1272
DATED : 10 OCT. 2018 FILE No. : 182623

LOT COVERAGE : AREA OF LOT _____ 1394.04m²
FOOTPRINT OF BUIDLING _____ 874.96m²
GROSS FLOOR AREA _____ 3485.82m²
FLOOR AREA RATIO _____ 2.50

AREA DENSITY : THERE IS NO MAXIMUM AREA DENSITY FOR PARCELS IN M-C2 DISTRICTS.

WASTE INFO : 30 DWELLING UNITS EXPECTED TO PRODUCE 6.9m³ OF WASTE MATERIAL PER WEEK.
AUTOMATED CARTS = 0.24m³ x 4 = 0.96m³
4 YARD BIN = 3.06m³ x 2 = 6.12m³
6 YARD BIN = 4.58m³
TOTAL = 11.66m³

FLOOR AREA : MAIN FLOOR = 513.47m²
2nd FLOOR = 833.39m²
3rd FLOOR = 833.39m²
4th FLOOR = 833.39m²
5th FLOOR = 472.18m²
TOTAL = 3485.82m²

VEHICLE PARKING : PARKING STALLS REQUIRED :
AREA 3 = 0.9 x 30 DWELLING UNITS = 27 STALLS
VISITOR PARKING STALLS REQUIRED = 5 STALLS
PARKING PROVIDED = 17 STALLS

BIKE PARKING : CLASS 1 = 0.5 x 30 DWLGS = 15 (32 PROVIDED INDOORS)
CLASS 2 = 0.1 x 30 DWLGS = 3 (5 PROVIDED OUTDOORS)

WINDOW & DOOR LOCATIONS
5th FLOOR OPENINGS
2nd - 4th FLOOR OPENINGS
GROUND FLOOR OPENINGS
BASEMENT OPENINGS

FLOOR AREAS
DENOTES ONE STOREY
DENOTES 4 STOREYS
DENOTES 5 STOREYS

baboushkin design group
tel : (403) 283-4319 fax : (403) 283-3603
1310A gladstone road nw calgary alberta t2n 3g3

no.	revisions	date
.	.	.
	issued for development permit	21/02/17
	issued for building permit	.

consultants

notes :
1. THIS DRAWING MUST NOT BE SCALED
2. CONTRACTORS SHALL VERIFY ALL DIMENSIONS PRIOR TO COMMENCING WORK. ANY ERRORS OR OMISSIONS MUST BE REPORTED TO DESIGNER IMMEDIATELY.
3. THIS DRAWING IS THE EXCLUSIVE PROPERTY OF THE DESIGNERS AND MAY NOT BE REPRODUCED WITHOUT THEIR WRITTEN PERMISSION. ALL WORK IS COPYRIGHTED TO 1696508 ALBERTA LTD.

client approval :

project :
PROPOSED MULTI-RESIDENTIAL DEVELOPMENT
2400 5th STREET NW
CALGARY, AB
Lots 15 - 20, Block 40, Plan 29340

drawing title :
SITE PLAN

date :	drawn by :	drawing no. :
FEB. 17, 2021	Dan Boudreau	A0
scale : AS NOTED	job file no.: -	rev. no.: .

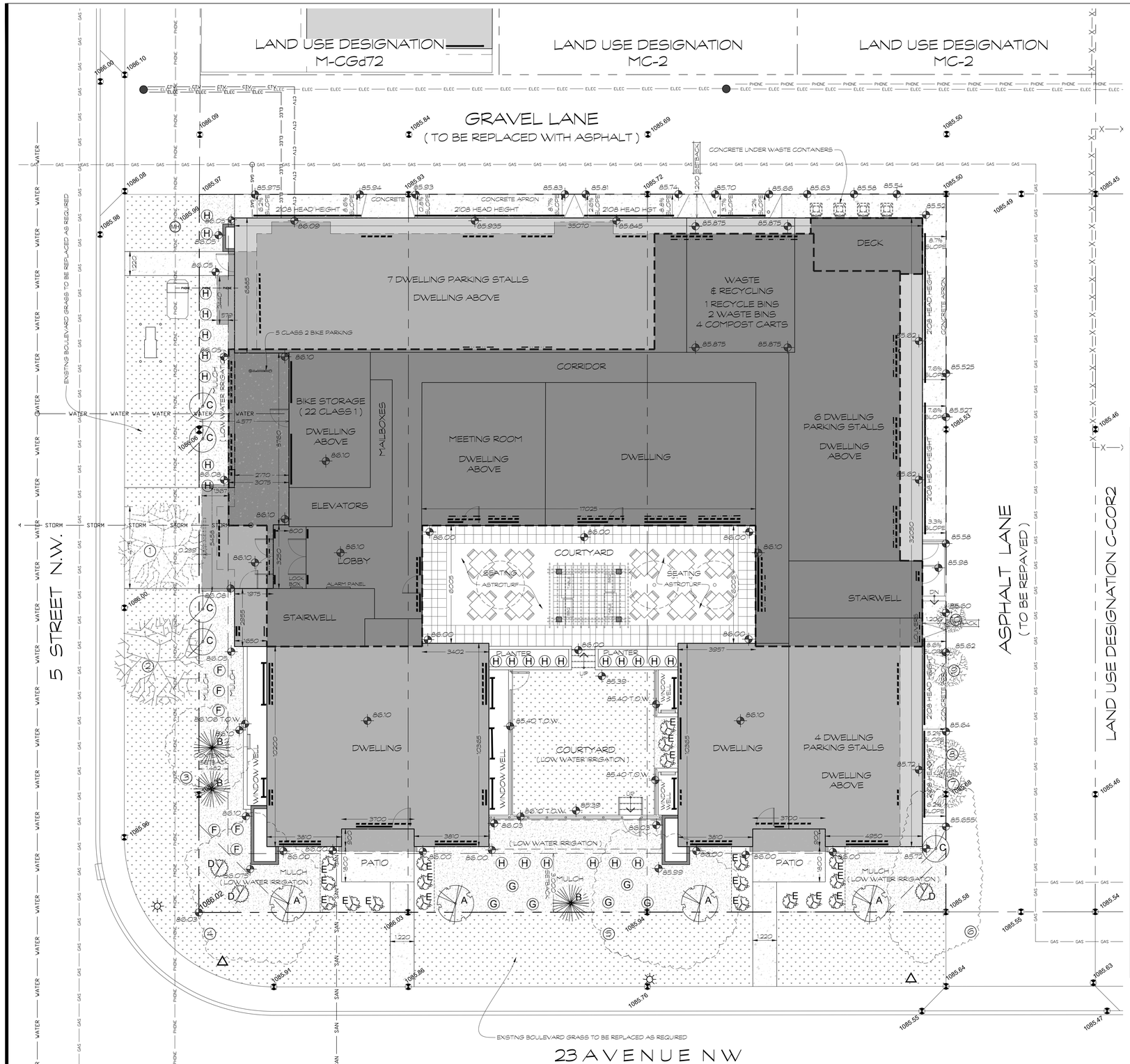

1 / A1 LANDSCAPE PLAN
1 : 100

PROPOSED PLANT SCHEDULE

A	AMUR MAPLE (4) ACER GINNALA 60mm CALIPER AT TIME OF PLANTING	D	BUFFALO JUNIPER (3) JUNIPERUS SABINA ' BUFFALO ' 5 GAL. AT TIME OF PLANTING
B	BLUE SPRUCE (3) PICEA PUNGENS 1.8m HIGH AT TIME OF PLANTING	E	ALPINE CURRANT (19) RIBES ALPINUM 2 GAL. AT TIME OF PLANTING
C	PRAIRIE SKY RISE TREMBLING ASPEN (5) POPULOUS TREMULOIDES 50mm CALIPER AT TIME OF PLANTING	F	DAY LILY (6) HEMEROCALLIS LILIOASPHODELUS
		G	BLUE FESCUE (6) FESTUCA GLAUCA
	CONCRETE	H	KARL FOERSTER GRASS (25) CALAMAGROSTIS ACUTIFLORA ' KARL FOERSTER
	457 x 457 CONCRETE PAVERS		LANDSCAPING REQUIRED : LOT = 1394.04 LESS 10% (BYLAW 553) = 1254.64 x 40% = 501.85
	305 x 305 CONCRETE PAVERS		LANDSCAPING PROVIDED : HARDSCAPE : 118.7m² SOFTSCAPE : 288.3m² TOTAL : 407.0m²
	MULCH - LOW WATER IRRIGATION		PERCENTAGE OF LANDSCAPING : 408.4m² / 1254.64m² = 32.55 %
	GRASS - LOW WATER IRRIGATION		

EXISTING PLANT SCHEDULE - ON EXISTING PUBLIC LANDS

1	EXISTING WEEPING BIRCH ' BETULA PENDULA - TO BE REMOVED CALIPER = 0.15 CANOPY = 4.5 HEIGHT = 4.0	6	EXISTING HEDGE - TO BE REMOVED CALIPER = N/A CANOPY = 2.5 HEIGHT = 2.5
2	EXISTING CRABAPPLE ' MALUS - TO REMAIN CALIPER = 0.15 CANOPY = 4.5 HEIGHT = 2.5	7	EXISTING DECIDOUS - TO BE REMOVED CALIPER = 0.10 CANOPY = 2.0 HEIGHT = 4.5
3	EXISTING BUSH - TO BE REMOVED CALIPER = N/A CANOPY = 4.5 HEIGHT = 4.0	8	EXISTING DECIDOUS - TO BE REMOVED CALIPER = 0.10 CANOPY = 2.0 HEIGHT = 4.5
4	EXISTING BUSH - TO BE REMOVED CALIPER = N/A CANOPY = 8.0 HEIGHT = 5.0	9	EXISTING DECIDOUS - TO BE REMOVED CALIPER = 0.10 CANOPY = 2.0 HEIGHT = 4.5
5	EXISTING HEDGE - TO BE REMOVED CALIPER = N/A CANOPY = 7.5 HEIGHT = 3.0	10	EXISTING DECIDOUS - TO BE REMOVED CALIPER = 0.15 CANOPY = 1.5 HEIGHT = 4.5

NOTE : ALL EXISTING TREES & SHRUBS ON EXISTING PROPERTIES TO BE REMOVED.

baboushkin design group
tel : (403) 283-4319 fax : (403) 283-3603
1310A gladstone road nw calgary alberta t2n 3g3

no.	revisions	date
.	.	.
	issued for development permit	21/02/17
	issued for building permit	.

consultants

notes :
1. THIS DRAWING MUST NOT BE SCALED
2. CONTRACTORS SHALL VERIFY ALL DIMENSIONS PRIOR TO COMMENCING WORK. ANY ERRORS OR OMISSIONS MUST BE REPORTED TO DESIGNER IMMEDIATELY.
3. THIS DRAWING IS THE EXCLUSIVE PROPERTY OF THE DESIGNERS AND MAY NOT BE REPRODUCED WITHOUT THEIR WRITTEN PERMISSION. ALL WORK IS COPYRIGHTED TO 1696508 ALBERTA LTD.

client approval :

project :
PROPOSED MULTI-RESIDENTIAL DEVELOPMENT

2400 5th STREET NW
CALGARY, AB

Lots 15 - 20, Block 40, Plan 29340

drawing title :
LANDSCAPE PLAN

date :	drawn by :	drawing no. :
FEB. 17, 2021	Dan Boudreau	A1
scale : AS NOTED	job file no. : -	rev. no. : .

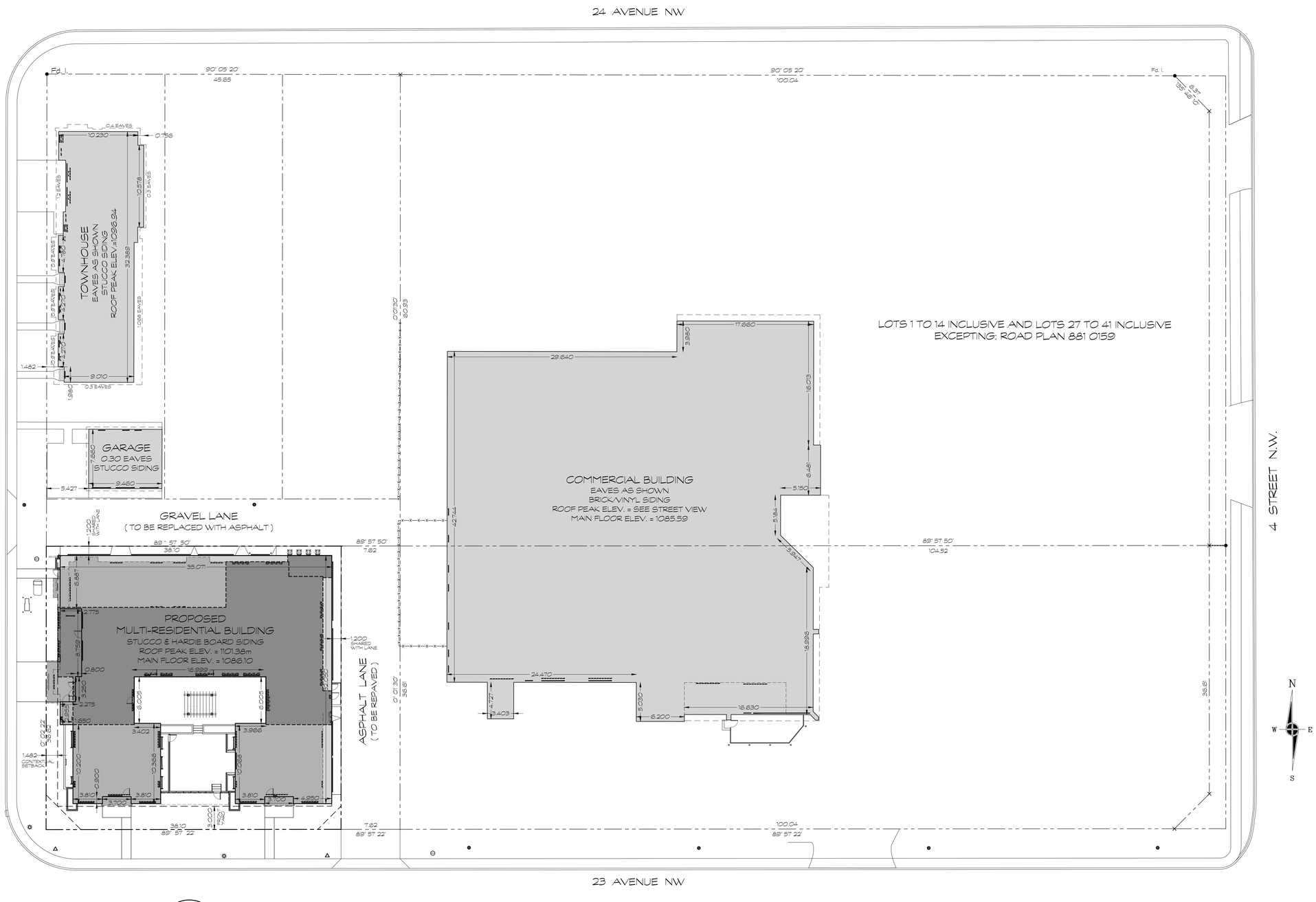

1 / A2 BLOCK PLAN

1 : 250

baboushkin design group

tel : (403) 283-4319 fax : (403) 283-3603

1310A gladstone road nw calgary alberta t2n 3g3

no.	revisions	date
.	.	.
	issued for development permit	21/02/17
	issued for building permit	.

consultants

notes :

1. THIS DRAWING MUST NOT BE SCALED
2. CONTRACTORS SHALL VERIFY ALL DIMENSIONS PRIOR TO COMMENCING WORK. ANY ERRORS OR OMISSIONS MUST BE REPORTED TO DESIGNER IMMEDIATELY.
3. THIS DRAWING IS THE EXCLUSIVE PROPERTY OF THE DESIGNERS AND MAY NOT BE REPRODUCED WITHOUT THEIR WRITTEN PERMISSION. ALL WORK IS COPYRIGHTED TO 1696508 ALBERTA LTD.

client approval :

project : PROPOSED MULTI-RESIDENTIAL DEVELOPMENT

2400 5th STREET NW
CALGARY, AB

Lots 15 - 20, Block 40, Plan 29340

drawing title : BLOCK PLAN

date :	drawn by :	drawing no. :
FEB. 17, 2021	Dan Boudreau	A2
scale : AS NOTED	job file no. : -	rev. no. : .

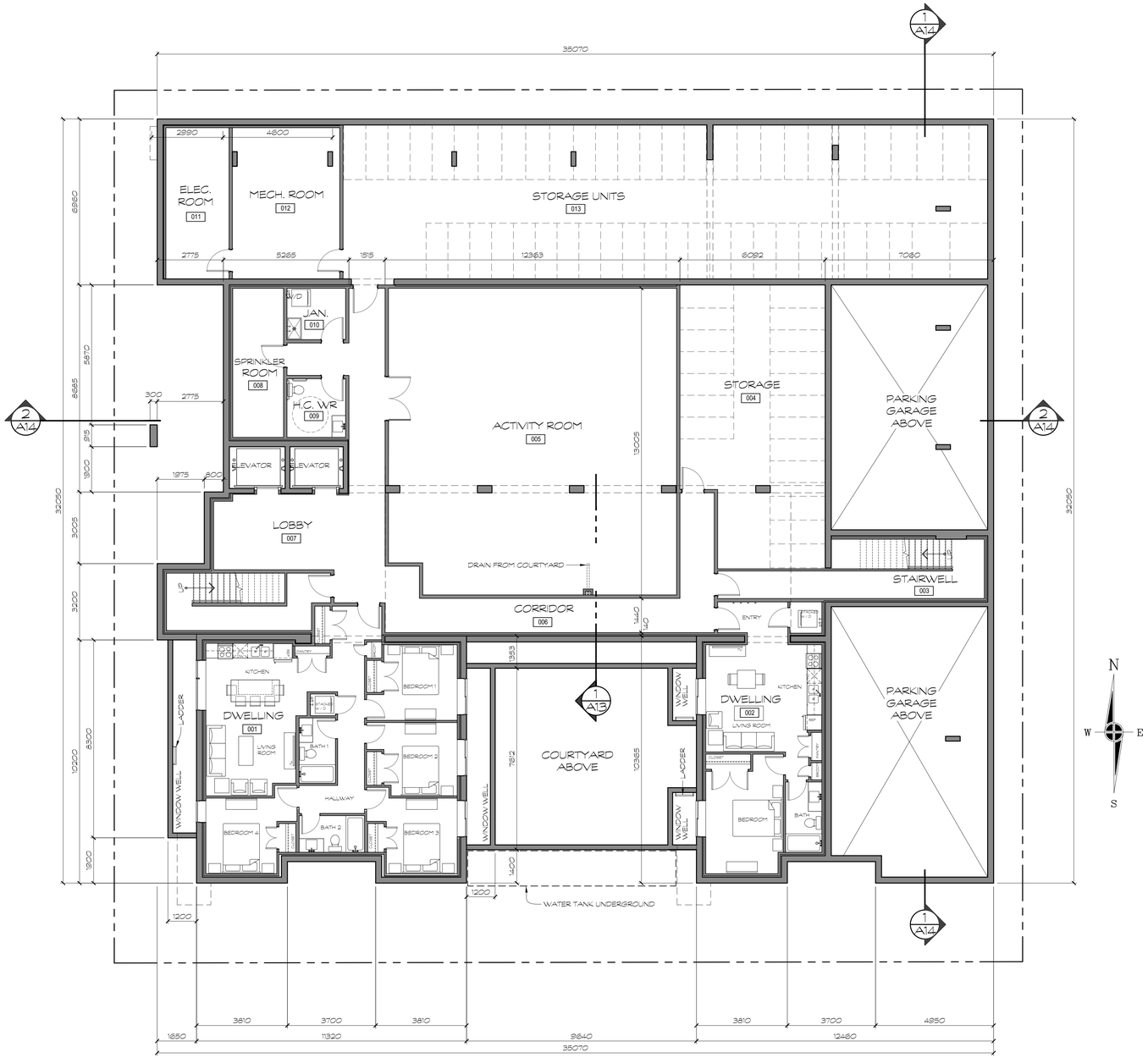

1 A3 LOWER FLOOR PLAN
1 : 100

baboushkin design group
tel : (403) 283-4319 fax : (403) 283-3603
1310A gladstone road nw calgary alberta t2n 3g3

no.	revisions	date
.	.	.
	issued for development permit	21/02/17
	issued for building permit	.

consultants

notes :
1. THIS DRAWING MUST NOT BE SCALED
2. CONTRACTORS SHALL VERIFY ALL DIMENSIONS PRIOR TO COMMENCING WORK. ANY ERRORS OR OMISSIONS MUST BE REPORTED TO DESIGNER IMMEDIATELY.
3. THIS DRAWING IS THE EXCLUSIVE PROPERTY OF THE DESIGNERS AND MAY NOT BE REPRODUCED WITHOUT THEIR WRITTEN PERMISSION. ALL WORK IS COPYRIGHTED TO 1696508 ALBERTA LTD.

client approval :

project :
PROPOSED MULTI-RESIDENTIAL DEVELOPMENT
2400 5th STREET NW
CALGARY, AB
Lots 15 - 20, Block 40, Plan 29340

drawing title :
LOWER FLOOR PLAN

date :	drawn by :	drawing no. :
FEB. 17, 2021	Dan Boudreau	A3
scale : AS NOTED	job file no.: -	rev. no.: .

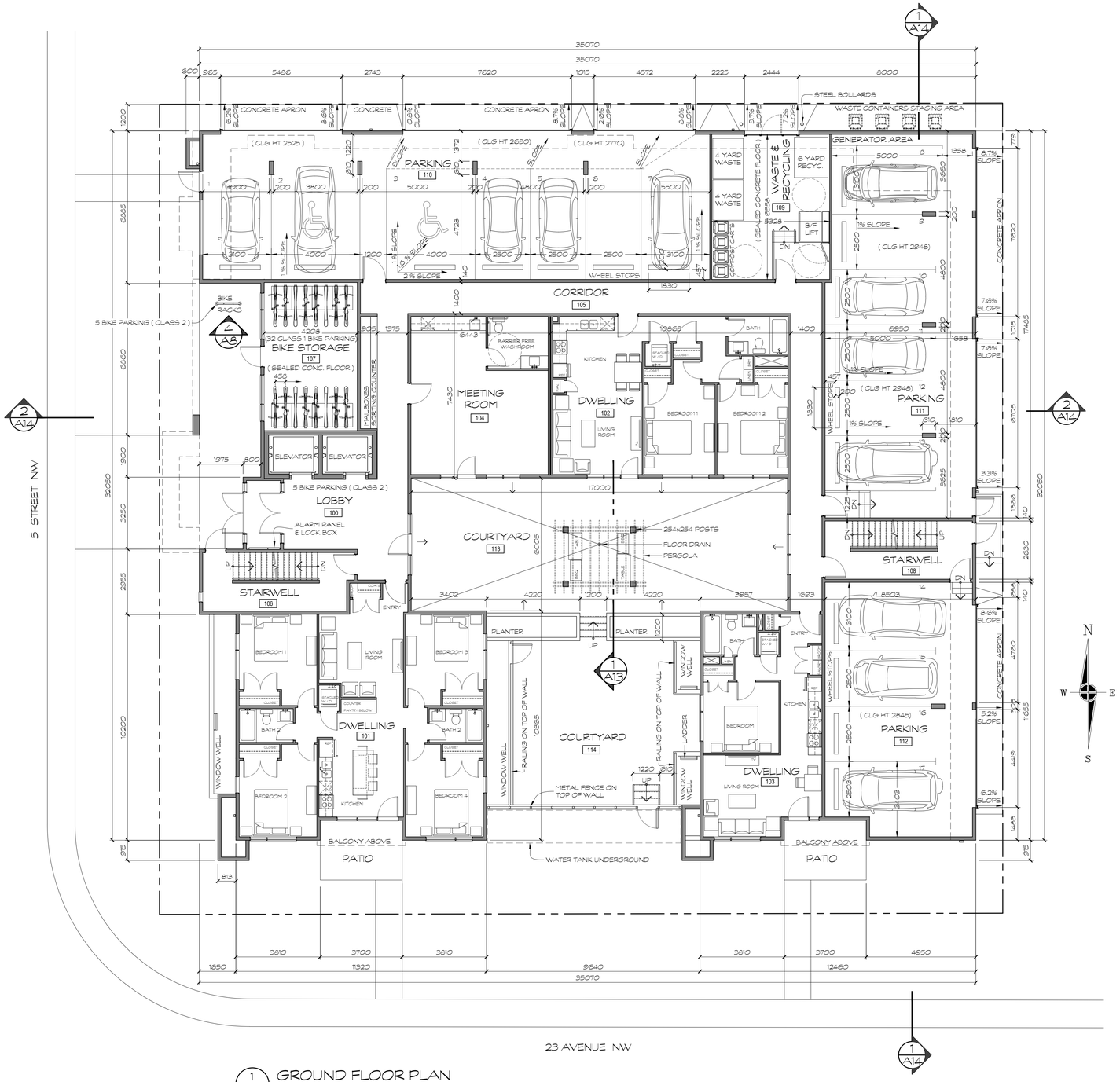

1 A4 GROUND FLOOR PLAN
1 : 100 513.47m²

baboushkin design group
tel : (403) 283-4319 fax : (403) 283-3603
1310A gladstone road nw calgary alberta t2n 3g3

no.	revisions	date
.	.	.
	issued for development permit	21/02/17
	issued for building permit	.

consultants

notes :
1. THIS DRAWING MUST NOT BE SCALED
2. CONTRACTORS SHALL VERIFY ALL DIMENSIONS PRIOR TO COMMENCING WORK. ANY ERRORS OR OMISSIONS MUST BE REPORTED TO DESIGNER IMMEDIATELY.
3. THIS DRAWING IS THE EXCLUSIVE PROPERTY OF THE DESIGNERS AND MAY NOT BE REPRODUCED WITHOUT THEIR WRITTEN PERMISSION. ALL WORK IS COPYRIGHTED TO 1696508 ALBERTA LTD.

client approval :

project : PROPOSED MULTI-RESIDENTIAL DEVELOPMENT

2400 5th STREET NW
CALGARY, AB

Lots 15 - 20, Block 40, Plan 29340

drawing title : MAIN FLOOR PLAN

date :	drawn by :	drawing no. :
FEB. 17, 2021	Dan Boudreau	A4
scale : AS NOTED	job file no. : -	rev. no. : .

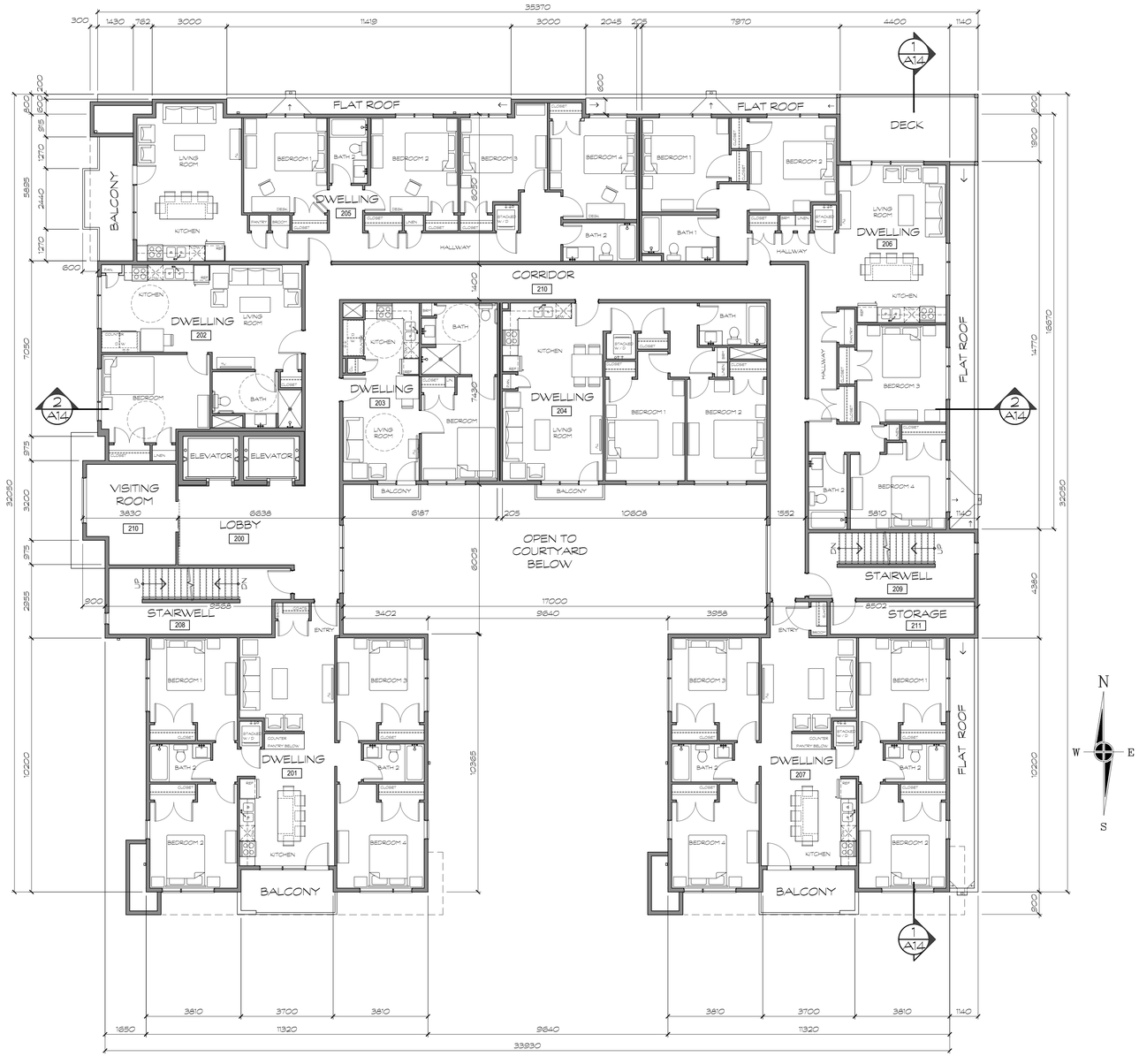

1 A5 2nd & 3rd FLOOR PLAN

1 : 100 833.33m²

baboushkin design group

tel : (403) 283-4319 fax : (403) 283-3603

1310A gladstone road nw calgary alberta t2n 3g3

no.	revisions	date
.	.	.
	issued for development permit	21/02/17
	issued for building permit	.

consultants

notes :

1. THIS DRAWING MUST NOT BE SCALED
2. CONTRACTORS SHALL VERIFY ALL DIMENSIONS PRIOR TO COMMENCING WORK. ANY ERRORS OR OMISSIONS MUST BE REPORTED TO DESIGNER IMMEDIATELY.
3. THIS DRAWING IS THE EXCLUSIVE PROPERTY OF THE DESIGNERS AND MAY NOT BE REPRODUCED WITHOUT THEIR WRITTEN PERMISSION. ALL WORK IS COPYRIGHTED TO 1696508 ALBERTA LTD.

client approval :

project :

PROPOSED MULTI-RESIDENTIAL DEVELOPMENT

2400 5th STREET NW
CALGARY, AB

Lots 15 - 20, Block 40, Plan 29340

drawing title :

2dn & 3rd FLOOR PLAN

date :	drawn by :	drawing no. :
FEB. 17, 2021	Dan Boudreau	A5
scale : AS NOTED	job file no.: -	rev. no.: .

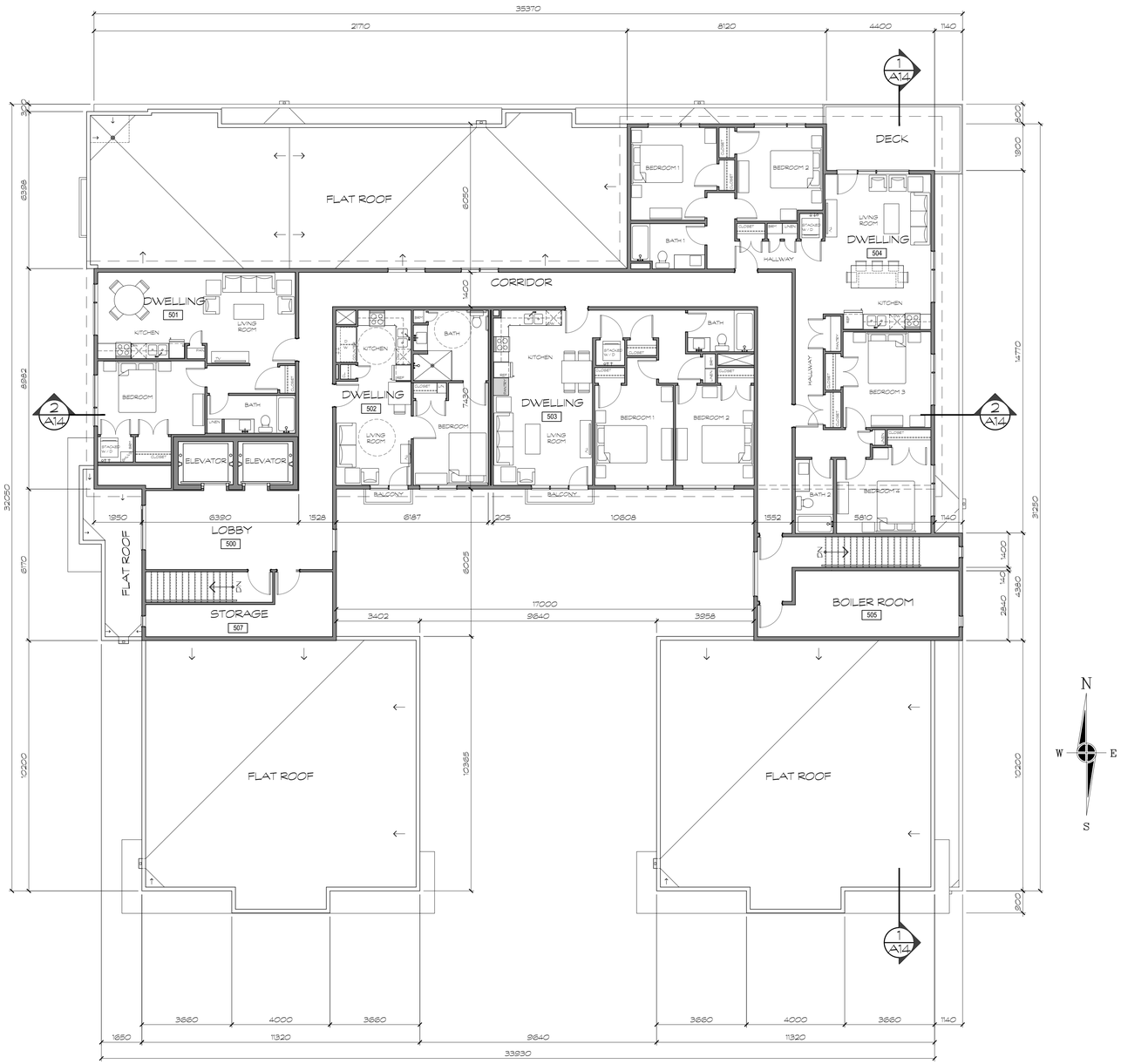

1 A7 5th FLOOR PLAN

1 : 100 472.18m²

baboushkin design group

tel : (403) 283-4319 fax : (403) 283-3603

1310A gladstone road nw calgary alberta t2n 3g3

no.	revisions	date
.	.	.
	issued for development permit	21/02/17
	issued for building permit	.

consultants

notes :

1. THIS DRAWING MUST NOT BE SCALED
2. CONTRACTORS SHALL VERIFY ALL DIMENSIONS PRIOR TO COMMENCING WORK. ANY ERRORS OR OMISSIONS MUST BE REPORTED TO DESIGNER IMMEDIATELY.
3. THIS DRAWING IS THE EXCLUSIVE PROPERTY OF THE DESIGNERS AND MAY NOT BE REPRODUCED WITHOUT THEIR WRITTEN PERMISSION. ALL WORK IS COPYRIGHTED TO 1696508 ALBERTA LTD.

client approval :

project : PROPOSED MULTI-RESIDENTIAL DEVELOPMENT

2400 5th STREET NW
CALGARY, AB

Lots 15 - 20, Block 40, Plan 29340

drawing title :

5th FLOOR PLAN

date :	drawn by :	drawing no. :
FEB. 17, 2021	Dan Boudreau	A7
scale : AS NOTED	job file no.: -	rev. no.: .

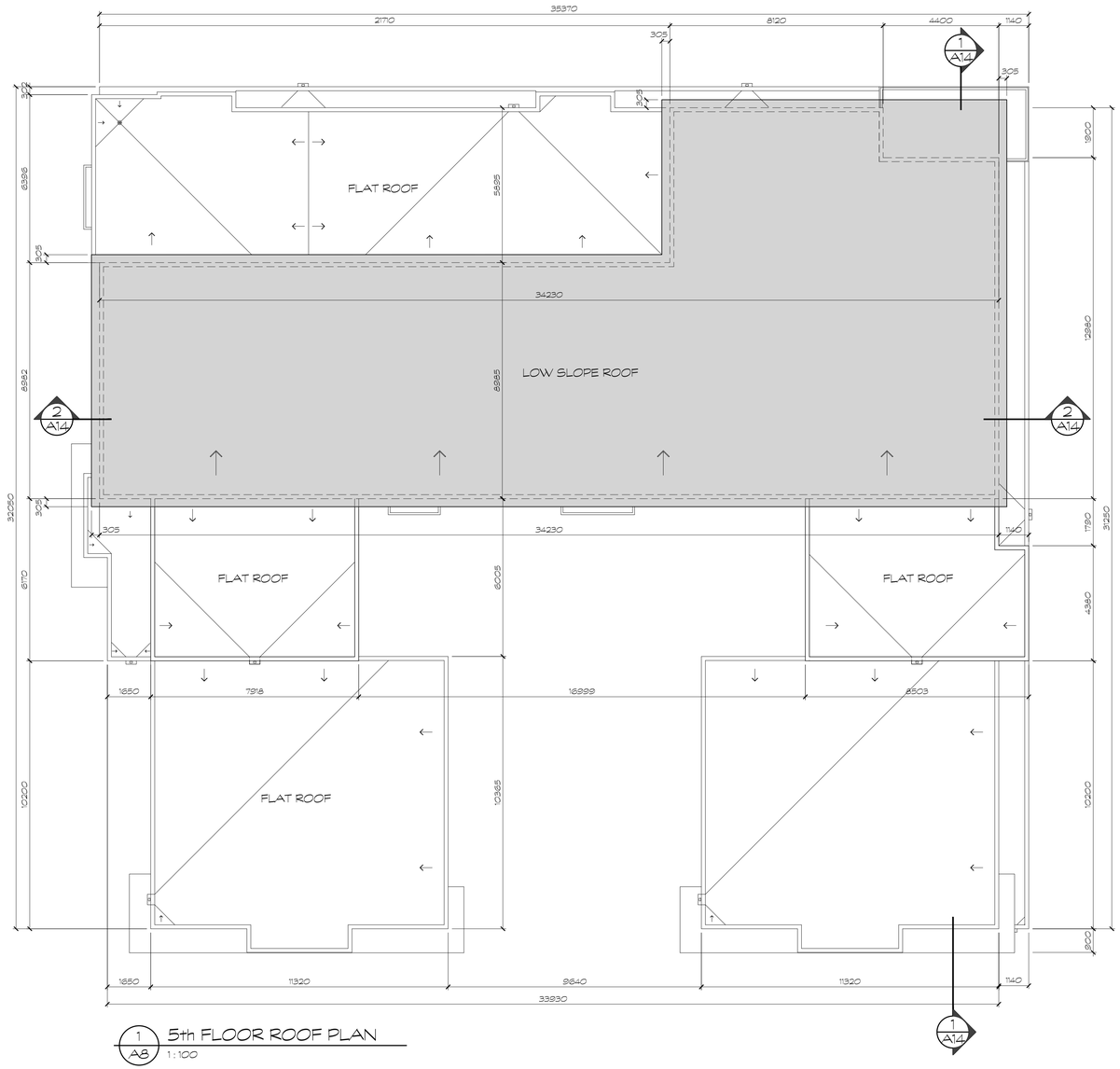

1 A8 5th FLOOR ROOF PLAN
1 : 100

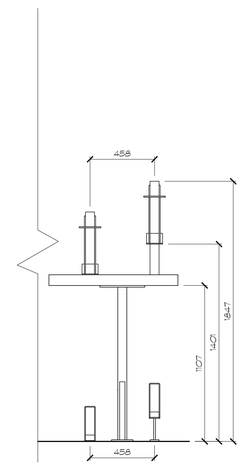

2 A8 INTERIOR BIKE RACK FRONT ELEVATION
1 : 20 4 BIKE CAPACITY EACH

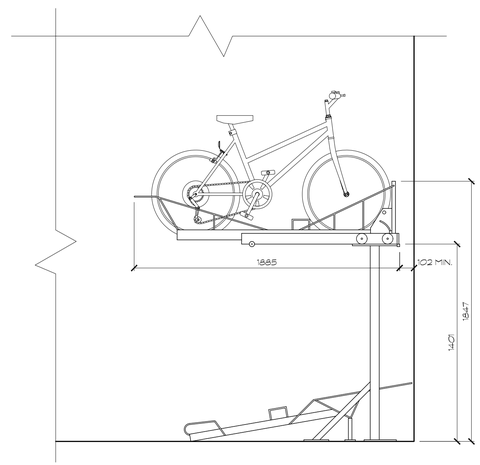

3 A8 INTERIOR BIKE RACK SIDE ELEVATION
1 : 20 4 BIKE CAPACITY EACH

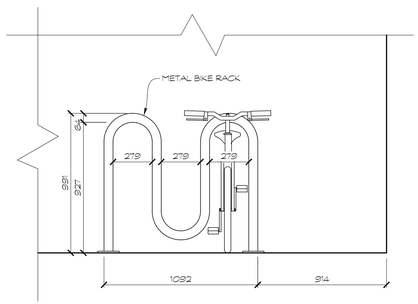

4 A8 EXTERIOR BIKE RACK FRONT ELEV.
1 : 20 5 BIKE CAPACITY

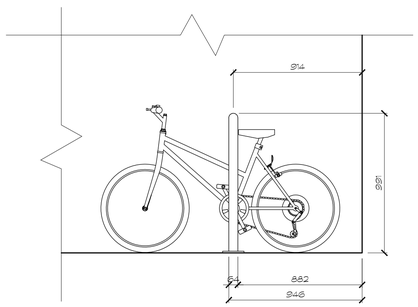

5 A8 EXTERIOR BIKE RACK SIDE ELEV.
1 : 20 5 BIKE CAPACITY

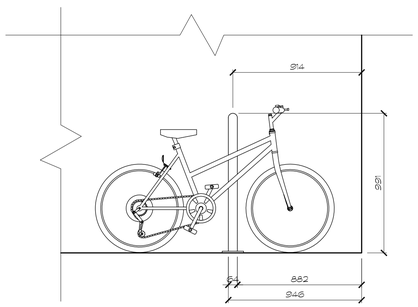

6 A8 EXTERIOR BIKE RACK SIDE ELEV.
1 : 20 5 BIKE CAPACITY

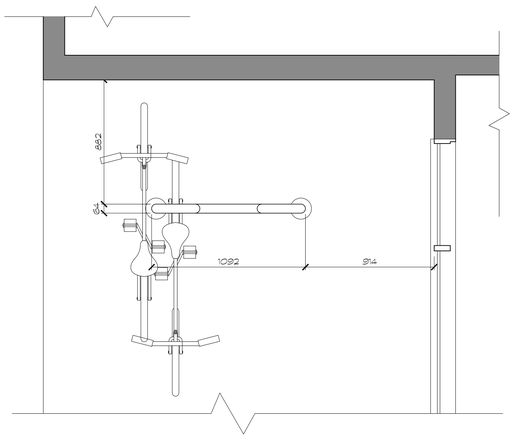

7 A8 EXTRIOR BIKE RACK PLAN - 5 BIKE
1 : 20

baboushkin design group
tel : (403) 283-4319 fax : (403) 283-3603
1310A gladstone road nw calgary alberta t2n 3g3

no.	revisions	date
.	.	.
	issued for development permit	21/02/17
	issued for building permit	.

consultants

notes :
1. THIS DRAWING MUST NOT BE SCALED
2. CONTRACTORS SHALL VERIFY ALL DIMENSIONS PRIOR TO COMMENCING WORK ANY ERRORS OR OMISSIONS MUST BE REPORTED TO DESIGNER IMMEDIATELY.
3. THIS DRAWING IS THE EXCLUSIVE PROPERTY OF THE DESIGNERS AND MAY NOT BE REPRODUCED WITHOUT THEIR WRITTEN PERMISSION. ALL WORK IS COPYRIGHTED TO 1696508 ALBERTA LTD.

client approval :

project : PROPOSED MULTI-RESIDENTIAL DEVELOPMENT

2400 5th STREET NW
CALGARY, AB

Lots 15 - 20, Block 40, Plan 29340

drawing title :
5th FLOOR ROOF PLAN
BIKE RACK DETAILS

date :	drawn by :	drawing no. :
FEB. 17, 2021	Dan Boudreau	A8
scale : AS NOTED	job file no.: -	rev. no.: .

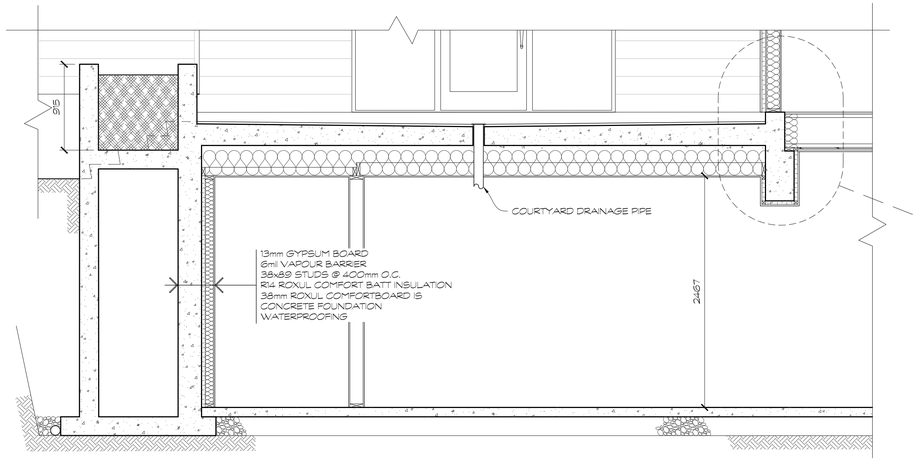

1 / A13 BUILDING SECTION THROUGH COURTYARD
1 : 30

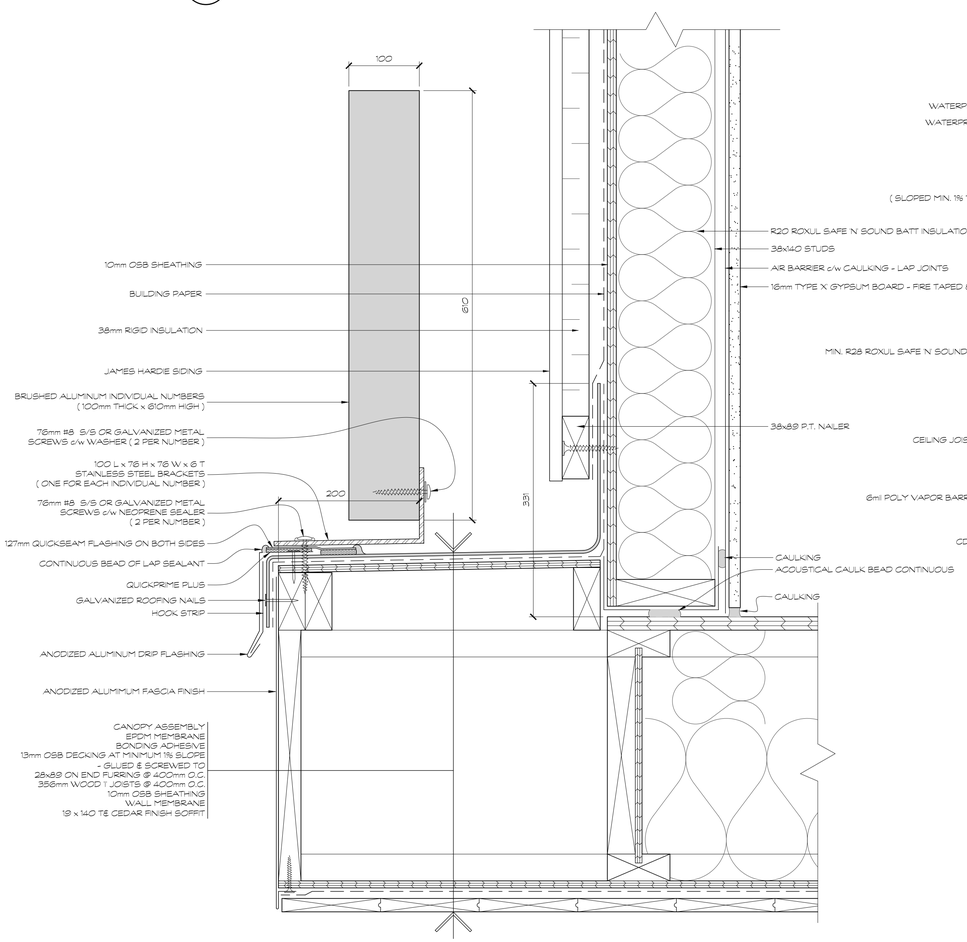

2 / A13 CANOPY / SIGNAGE DETAIL
1 : 4

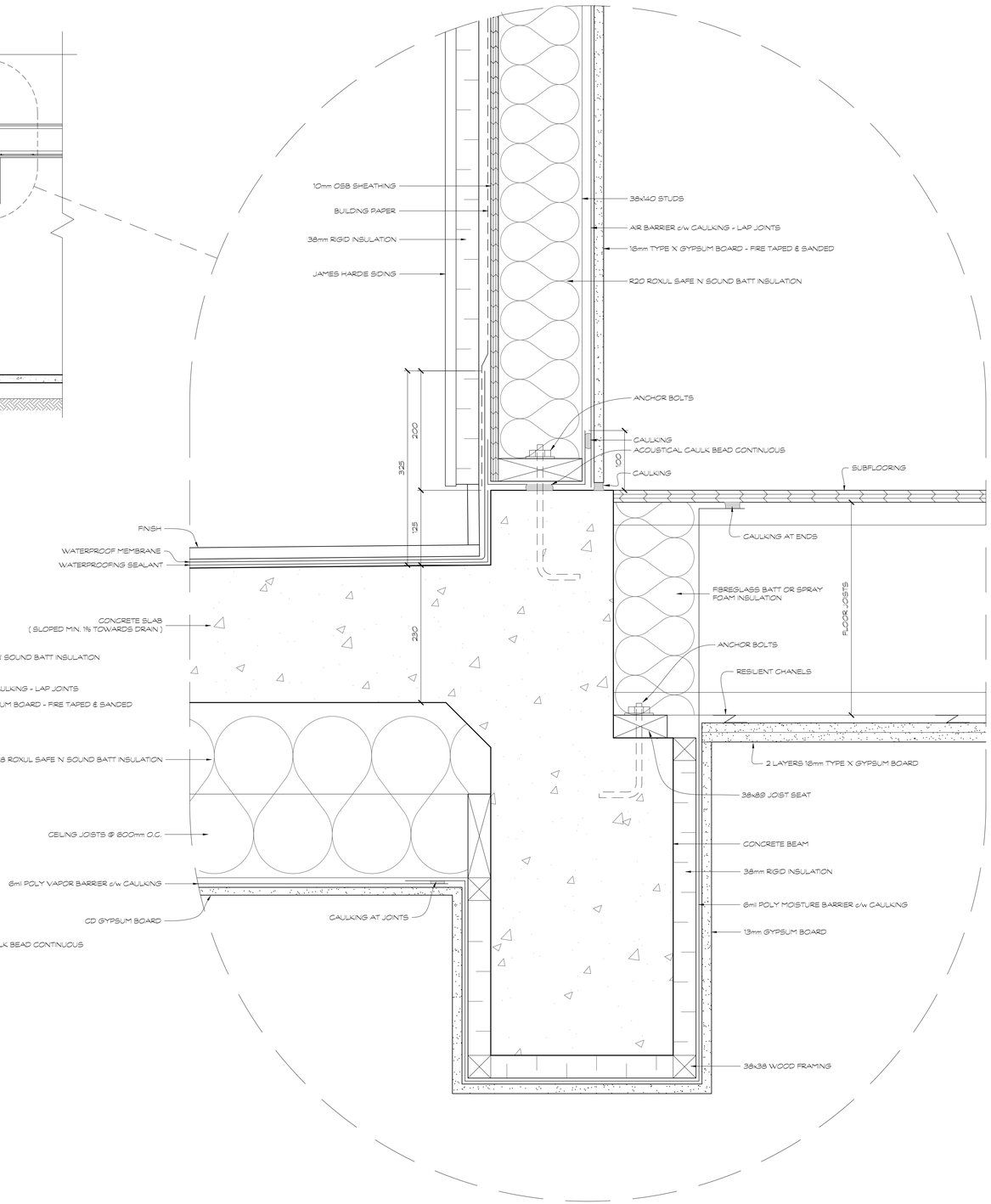

3 / A13 WALL FLASHING & COURTYARD SLAB DETAIL
1 : 4

baboushkin design group
tel : (403) 283-4319 fax : (403) 283-3603
1310A gladstone road nw calgary alberta t2n 3g3

no.	revisions	date
.	.	.
	issued for development permit	21/02/17
	issued for building permit	.

consultants

notes :
1. THIS DRAWING MUST NOT BE SCALED
2. CONTRACTORS SHALL VERIFY ALL DIMENSIONS PRIOR TO COMMENCING WORK. ANY ERRORS OR OMISSIONS MUST BE REPORTED TO DESIGNER IMMEDIATELY.
3. THIS DRAWING IS THE EXCLUSIVE PROPERTY OF THE DESIGNERS AND MAY NOT BE REPRODUCED WITHOUT THEIR WRITTEN PERMISSION. ALL WORK IS COPYRIGHTED TO 1696508 ALBERTA LTD.

client approval :

project : PROPOSED MULTI-RESIDENTIAL DEVELOPMENT

2400 5th STREET NW
CALGARY, AB

Lots 15 - 20, Block 40, Plan 29340

drawing title :
COURTYARD SLAB SECTION & DETAIL

date :	drawn by :	drawing no. :
FEB. 17, 2021	Dan Boudreau	A13
scale : AS NOTED	job file no.: -	rev. no.: .

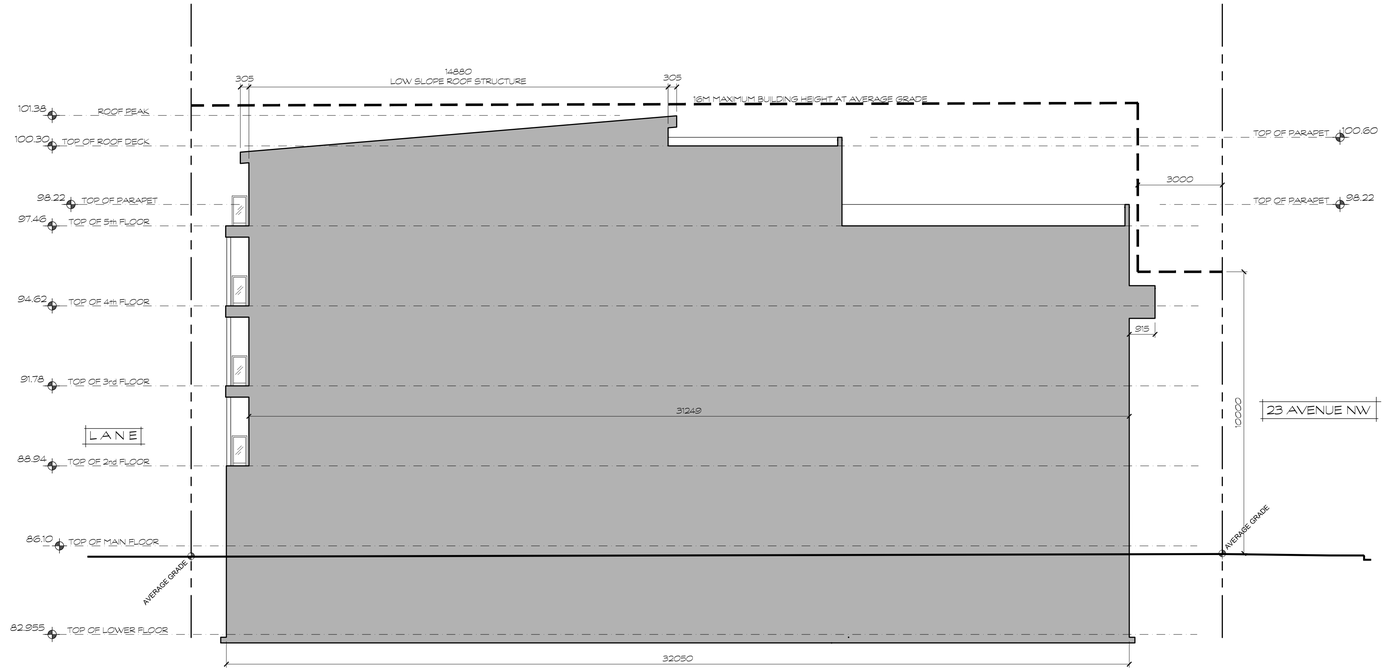

1 / A14 NORTH SOUTH BUILDING SECTION - EAST SIDE
1 : 100
AREA OF CROSS SECTION = 536.3m²

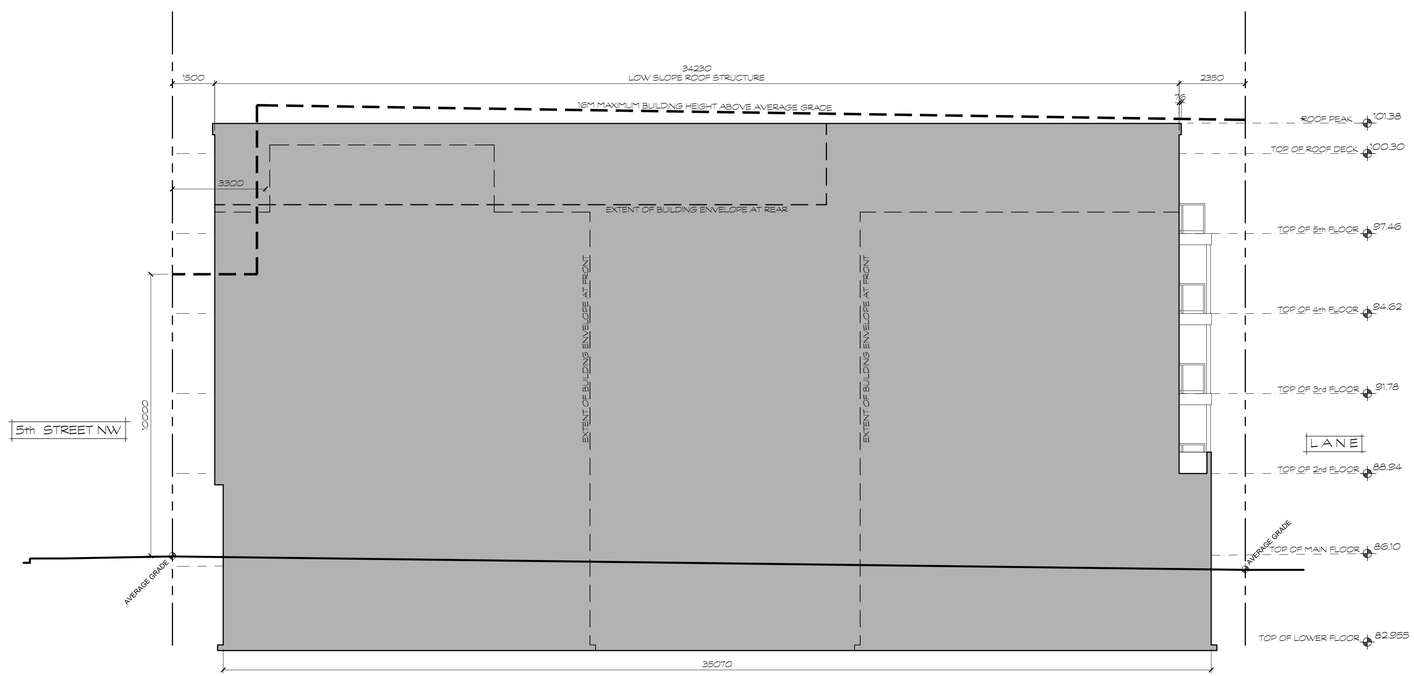

2 / A14 EAST WEST CROSS SECTION - NORTH END
1 : 100
AREA OF CROSS SECTION = 646.2m²

baboushkin design group
tel : (403) 283-4319 fax : (403) 283-3603
1310A gladstone road nw calgary alberta t2n 3g3

no.	revisions	date
.	.	.
	issued for development permit	21/02/17
	issued for building permit	.

consultants

notes :
1. THIS DRAWING MUST NOT BE SCALED
2. CONTRACTORS SHALL VERIFY ALL DIMENSIONS PRIOR TO COMMENCING WORK. ANY ERRORS OR OMISSIONS MUST BE REPORTED TO DESIGNER IMMEDIATELY.
3. THIS DRAWING IS THE EXCLUSIVE PROPERTY OF THE DESIGNERS AND MAY NOT BE REPRODUCED WITHOUT THEIR WRITTEN PERMISSION. ALL WORK IS COPYRIGHTED TO 1696508 ALBERTA LTD.

client approval :

project :
PROPOSED MULTI-RESIDENTIAL DEVELOPMENT
2400 5th STREET NW
CALGARY, AB
Lots 15 - 20, Block 40, Plan 29340

drawing title :
BUILDING CROSS SECTIONS

date :	drawn by :	drawing no. :
FEB. 17, 2021	Dan Boudreau	A14
scale : AS NOTED	job file no.: -	rev. no.: .